CITY OF GRANTS PASS
MEETING AGENDA
April 20, 2016
6 p.m. City Council Meeting
Council Chambers - 101 N.W. "A" Street

MAYOR: Darin Fowler

CITY COUNCIL MEMBERS:

Ward 1 Northwest Area	***Ward 2 Northeast Area***	***Ward 3 Southeast Area***	***Ward 4 Southwest Area***
Dan DeYoung	Valerie Lovelace	Ken Hannum	Shonna Bouteller
Roy Lindsay	Rick Riker	Dennis Roler	Jim Goodwin

Invocation

Flag Salute

Roll Call

1. PUBLIC COMMENT: This is a courtesy the Chair provides for citizens to address the Council regarding any item or issue that is not on tonight's agenda. The intent is to provide information that is pertinent to the City's jurisdiction. Each speaker will be given three minutes to address the Council as one body, not to individuals. Council may consider items brought up during this time later in our agenda during Matters from Mayor, Council and Staff.

   This meeting will proceed in an effective and courteous manner. Citizens and Council members will be allowed to state their positions in an atmosphere free from slander, threats, or other personal attacks. Signs or placards, outbursts of applause, campaigning for public office, or other disruptive behavior will not be tolerated.

   If you have a question regarding any government provided service or a current City policy, please contact the City Manager's office in an attempt to resolve the matter.

2. PUBLIC HEARING

   a. Public hearing regarding housing and community development needs & priorities for Year 2 Action Plan for use of Community Development Block Grant (CDBG) funds. **Pgs. 1-4**

Quasi-judicial

   b. Ordinance vacating the common property line between Tax Lots 2200, 2800 & 2900 of Map Number 36-05-19-DC. **Pgs. 5-16**

   c. Ordinance entering into a Development Agreement (2016-01) with Stutzman Investments, LLC for property located at 1741 Dowell Road. **Pgs. 17-26**

Legislative

d. Ordinance amending Article 12, Schedule 12-2: listing where Self-Storage and Warehouse facilities are permitted; amending Article 14: creating standards for Self-Storage facilities in general commercial and residential zones; and amending Article 30: creating definitions for Self-Storage and Warehouse. **Pgs. 27-82**

3. CONSENT AGENDA (Items included are of such routine nature or without controversy so that they may be approved with a single action).
Indicates short Staff presentation and Council comment.

a. Resolution authorizing the City Manager to create a School Marshal position and amend the Classification Plan. **Pgs. 83-88**

b. Resolution amending the procedures for conduct of business, Section 8 Meeting Dates. **Pgs. 89-94**

c. Resolution declaring certain property surplus and authorizing its appropriate disposal. **Pgs. 95-98**

d. Motion approving the Comprehensive Plan Map and Zone Map Amendment Historic District Expansion Findings of Fact. **Pgs. 99-108**

e. Motion approving the Development Code Text Amendment Slope Hazard District Article 13 ~ Special Purpose Districts and Article 18 PUD & Alternative Development Options Findings of Fact. **Pgs. 109-114**

f. Motion approving the minutes of the City Council meeting of April 6, 2016. **Pgs. 115-120**

g. Motion acknowledging the minutes of the Urban Tree Advisory Committee meeting of March 14, 2016. **Pgs. 121-122**

h. Motion acknowledging the minutes of the Bikeways and Walkways Committee meeting of March 8, 2016. **Pgs. 123-126**

4. COUNCIL ACTION

a. Ordinance amending the Grants Pass Municipal Code by adding Chapter 4.21 Social Gaming. **Pgs. 127-140**

b. Ordinance amending certain sections of Chapter 9.21 Sign Standards of the Grants Pass Municipal Code. **Pgs. 141-166**

c. Ordinance amending Grants Pass Municipal Code Section 6.46.110 Commercial Activity in Parks. **Pgs. 167-172**

d. Ordinance amending the Grants Pass Municipal Code by adding Chapter 8.70 - Jail Services Utility Fee. **Pgs. 173-184**

e. Resolution adding Jail Services Utility Fees in the Comprehensive Fee Schedule. **Pgs. 185-188**

f. Resolution authorizing the City Manager to amend the franchise agreement with Republic Services. **Pgs. 189-199**

5. MATTERS FROM MAYOR, COUNCIL AND STAFF

a. Committee Liaison reports.

6. EXECUTIVE SESSION 192.660 (2) (Executive session is held to discuss one of the following subjects: (a) Employment of Public Officers, (b) Dismissal or discipline of Public Officers/Employees, (c) Public Medical Staff, (d) Labor negotiations (news media not allowed without specific permission), (e) Real property transactions-negotiations, (f) To consider information or records that are exempt by law from public inspection, (h) With city attorney re: rights/duties, current-likely litigation, (i) Performance Evaluations of Public Officers, (j) Public Investments…)

None anticipated

7. ADJOURN

ACCOMMODATION OF PHYSICAL IMPAIRMENTS: In order to accommodate person with physical impairments, please notify the City Recorder's Office of any special physical or language accommodations at least 48 business hours prior to the meeting. To request these arrangements, please contact Karen Frerk, City Recorder at (541) 450.6000.

Item: Public hearing regarding housing and community development needs & priorities for Year 2 Action Plan for use of Community Development Block Grant (CDBG) funds. Date: April 20, 2016

SUBJECT AND SUMMARY:

This public hearing which is specified in the City's Community Development Block Grant (CDBG) Citizen Participation Plan is for the purpose of obtaining citizen views before the draft Annual Action Plan is developed and published for comment.

The specific purpose of the public hearing is 'to obtain views of citizens on housing and community development needs, including priority non-housing community development needs, and to receive public comment on how the proposed CDBG or other publicly funded activities will address the needs of the City's predominantly lower-income households.'

No action is required at this time.

RELATIONSHIP TO COUNCIL GOALS:

This supports all Council's goals of **LEADERSHIP** by encouraging citizen participation to help identify ways CDBG grant funds can be used to **KEEP CITIZENS SAFE**, encourage **ECONOMIC OPPORTUNITIES**, facilitate **SUSTAINABLE, MANAGEABLE GROWTH**, and maintain and expand our **INFRASTRUCTURE** to meet community needs.

CALL TO ACTION SCHEDULE:

No action is required at this time. A later public hearing will be held for adoption of the Annual Action Plan, which must be submitted to HUD by mid-August.

BACKGROUND:

In 2015, the City adopted its first 5-Year Consolidated Plan and 1-Year Action Plan for use of CDBG funds through the Entitlement Communities program, which provides a direct annual allocation of CDBG funds to the City. The City must adopt an Annual Action Plan each year that includes specific projects and activities to be funded with that year's grant funds, consistent with the program requirements and the City's 5-Year Consolidated Plan.

The City also updated its CDBG Citizen Participation Plan in 2015. The Citizen Participation Plan articulates the citizen participation purposes and objectives, and it also specifies the minimum requirements for public involvement.

ITEM: 2.a. PUBLIC HEARING REGARDING HOUSING AND COMMUNITY DEVELOPMENT NEEDS & PRIORITIES FOR YEAR 2 ACTION PLAN FOR USE OF COMMUNITY DEVELOPMENT BLOCK GRANT (CDBG) FUNDS.

Staff Report (continued):

It provides that at least one public hearing for the purpose described above is to be held before the draft Action Plan is published for comment. No City Council action is required at this public hearing.

Following the citizen participation and public hearing on needs, the draft 2016-2017 Action Plan will be developed, and there will be a 30-day public comment period on the draft plan and a public hearing for adoption of the plan. The adopted plan must be submitted to HUD by mid-August.

A public open house and workshop was also held on April 14, 2016, and a survey was distributed. Survey responses are being accepted through the end of April.

A City Council work session is also scheduled for May 9 for an update and discussion on development of the draft Action Plan.

COST IMPLICATION:

Revenue Source: This public hearing does not commit funds. Projects to be included in the Annual Action Plan would be funded from the Community Development Block Grant (CDBG) fund. Approximately $240,000 is expected to be available for projects and activities for the 2016-2017 Action Plan.

ALTERNATIVES:

No alternatives presented at this time.

RECOMMENDED ACTION:

No recommendation at this time.

POTENTIAL MOTION:

No motion needed at this time.

Background Information

In 2015, the City of Grants Pass adopted a 5-Year 'Consolidated Plan' to guide use of projected Community Development Block Grant (CDBG) funds over the next five years. Each year, the City adopts an annual Action Plan for specific projects to be undertaken in that year with the grant funds to address needs and priorities consistent with the Consolidated Plan. Input regarding needs and priorities will be used in development of the 2016-2017 Action Plan.

The City estimates approximately $240,000 will be available for projects in the 2016-2017 action plan. These funds can also be leveraged with funds of other qualifying organizations to fund qualifying projects and activities.

- **Predominant LMI Benefit.** At least 70% of that amount (approximately $168,000) must be for projects that predominantly benefit (at least 51%) low/moderate income (LMI) residents in one or more of the following ways:
  - **Area Benefit:** At least 51% LMI in project's service area
  - **Limited Clientele:** At least 51% LMI served
  - **Housing:** At least 51% LMI occupancy in apartments, 50% in duplex, 100% in single dwelling
  - **Jobs:** At least 51% available to LMI

- **Blight Prevention or Urgent Need.** Up to 30% of that amount (approximately $72,000) could be used for projects that help prevent or eliminate blight or meet an urgent need that poses an immediate and serious threat to health, safety, or welfare, when other funding is not available.

- **Public Service Agency Limitation.** In any of those categories, no more than 15% (approximately $36,000) can be used for funding of public services by public service agencies.

- **Carry-Over Funds.** Carry-over funds from the prior year might also be available for use in 2016-2017 or carried over for use in a future year. Some funds from 2016-2017 could also be carried over into a future year, potentially to allow combined funds to be used for larger projects.

The projects must address needs identified in the 5-Year Consolidated Plan and be consistent with the general funding priorities and categories identified in the Consolidated Plan. If new critical needs are identified, it may be necessary to amend the Consolidated Plan to fund projects that address those needs.

These funds are to address a range of community development needs, which can include affordable housing, overcoming homelessness, public improvements and investments in predominantly low-/moderate income neighborhoods, economic development projects, and jobs or other skills training.

Funds must be used for eligible activities. Below is a very brief summary of eligible and ineligible activities. Please be aware there is detailed guidance about each item listed.

Eligible Activities	Ineligible Activities
Acquisition of real property; disposition; public facilities and improvements; clearance; new public services (or increased level); interim assistance; relocation; loss of rental income; privately-owned utilities; rehabilitation; construction of housing (very limited, but some activities that support new housing are eligible); code enforcement; special economic development activities; microenterprise assistance; special activities by CBDOs; homeownership assistance; planning and capacity building; program administration costs; miscellaneous other activities.	**Categorically ineligible:** Buildings or portions used for general conduct of government; general government expenses; political activities. **Generally ineligible: purchase of equipment** (construction equipment, fire protection equipment, furnishings and personal property); **operating and maintenance expenses** (i.e. maintenance and repair of public streets, parks, playgrounds, utilities, senior centers, other public facilities, etc.; salaries, utility costs, etc. for operation of public works and facilities); **new housing construction** (except as noted); **income payments.**

Item: Ordinance vacating the common property line between tax lots 2200, 2800 & 2900 of Map Number 36-05-19-DC. Date: April 20, 2016

SUBJECT AND SUMMARY:

This request is to vacate the common property line between the three parcels to create a single parcel.

RELATIONSHIP TO COUNCIL GOALS:

This supports the Council's goal of **ENCOURAGE ECONOMIC OPPORTUNITIES** by providing owners with the ability to better manage their property for development and remodeling.

CALL TO ACTION SCHEDULE:

Final action on the application shall be taken within 120 days of the date the application is deemed complete. Call to action schedule: July 23, 2016.

BACKGROUND:

The proposed property line vacation would eliminate the existing property lines (see Exhibit 'A'), allowing the property to be developed as planned by the owners. The existing structure on tax lot 2200 is currently vacant and the owners plan to redevelop the structure and include the adjacent properties (tax lots 2800 and 2900) as a single development. Notice of the proposal and hearing was mailed to surrounding property owners on March 30, 2016. The new property configuration will be in compliance with the criteria contained in Section 17.112 of the *Grants Pass Development Code.*

COST IMPLICATION:

None.

ALTERNATIVES:

- Approve the property line vacation;
- Deny the property line vacation; or
- Deny the request and require the owner submit a property line adjustment application which involves conducting a survey and recording a final plat.

Staff Report (continued):

RECOMMENDED ACTION:

It is recommended the Council approve the property line vacation.

POTENTIAL MOTION:

I move to adopt the ordinance vacating the common property line between tax lots 2200, 2800 & 2900 of Map Number 36-05-19-DC.

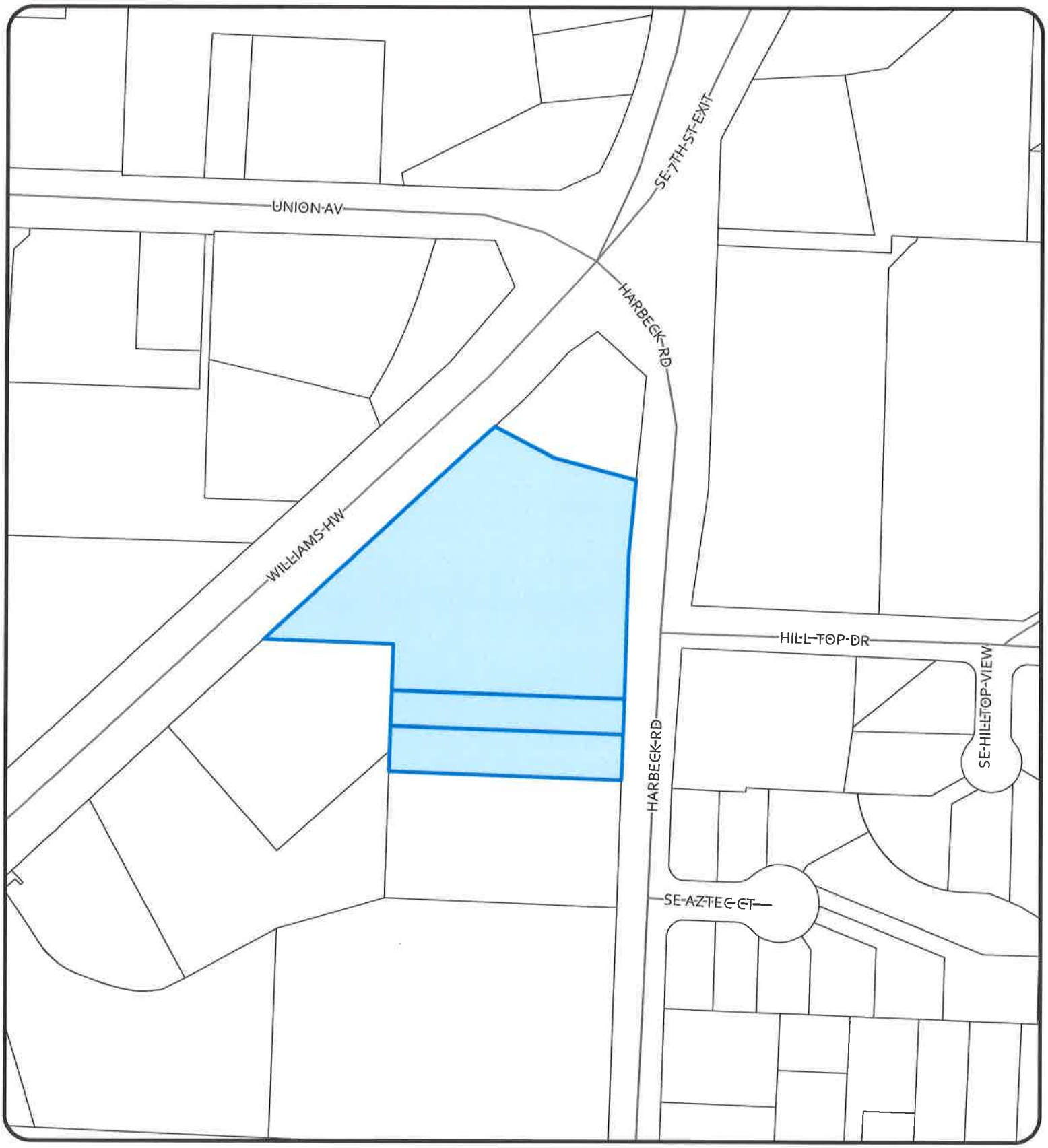

CITY OF GRANTS PASS

36-05-19-DC,
TLs 2200, 2800 & 2900

0 30 60 120 180 240 Feet

Legend

Subject Parcels

EXHIBIT A

N

CITY OF GRANTS PASS
Parks & Community Development Dept.
101 Northwest "A" Street
Grants Pass, OR 97526
Phone: (541) 450-6060
Fax: (541) 476-9218
Web: www.grantspassoregon.gov

April 20, 2016

DISCLAIMER: The Geographic Information Systems (GIS) data made available on this map are developed and maintained by the City of Grants Pass and Josephine County. Every reasonable effort has been made to assure the accuracy of the maps and associated data.

ORDINANCE NO.

AN ORDINANCE OF THE COUNCIL OF THE CITY OF GRANTS PASS VACATING THE COMMON PROPERTY LINE BETWEEN TAX LOTS 2200, 2800 AND 2900 OF MAP NUMBER 36-05-19-DC.

WHEREAS:

1. ORS 92.017 and Section 17.100 of the City of Grants Pass Development Code provides for the City Council to vacate the property lines separating abutting properties when the property owner requests the Council to do so; and

2. The owner of the properties contained in this ordinance has submitted an application to vacate the common property line separating these properties; and

3. The vacation of the property line will not result in a substandard condition relative to the requirements of the City of Grants Pass including the abandonment of unutilized sewer laterals and relocation of public water infrastructure including water services; and

4. The vacation of the property line is not contrary to the public health, safety, welfare and convenience or any other purpose of Article 17.

NOW, THEREFORE, THE CITY OF GRANTS PASS HEREBY ORDAINS:

Section 1. The property line separating the above referenced parcels located at 1555 Williams Highway, 1612 Harbeck Road, and 1622 Harbeck Road, City of Grants Pass, Oregon, also known as Assessor's Map 36-05-19-DC, TLs 2200, 2800 & 2900 is hereby vacated thirty (30) days from today's date pursuant to the Grants Pass Development Code. See Exhibit "1" and Exhibit "2".

Section 2. The City Recorder shall cause this ordinance to be recorded with the Josephine County Clerk within thirty (30) days of its effective date.

ADOPTED by the Council of the City of Grants Pass, Oregon, in regular session this 20th day of April, 2016.

AYES:

NAYS: **ABSTAIN:** **ABSENT:**

SUBMITTED to and _____ by the Mayor of the City of Grants Pass, Oregon, this ____ day of April, 2016.

_____
Darin Fowler, Mayor

ATTEST:

_____ Date submitted to Mayor: _____
Karen Frerk, City Recorder

Approved as to Form, Mark Bartholomew, City Attorney _____

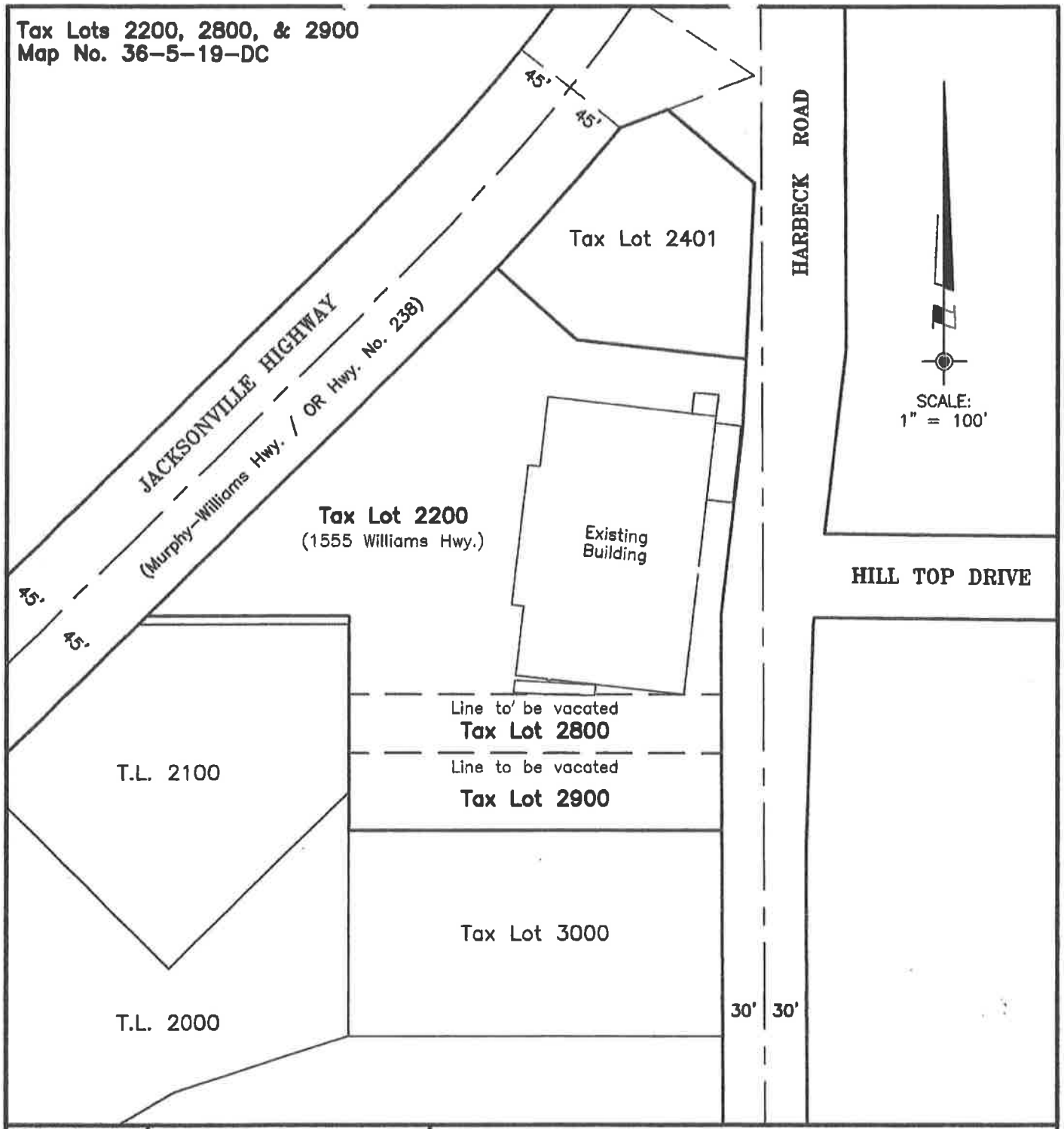

PROJECT NO. 1234-15-765	REGISTERED PROFESSIONAL LAND SURVEYOR	**PLAT OF PROPERTY LINE VACATION**
DRAWING NO. 201-8.5.11	Gary D. Wicks	LOCATED IN: SW1/4SE1/4 of Section 19 Township 36 South, Range 5 West, W.M. Josephine County, Oregon
DATE: March 15, 2016	OREGON JULY 22, 1977 GARY D. WICKS 1108	PREPARED FOR: FJM INVESTMENTS, INC. 222 Kearny Street, Suite 600 San Francisco, CA 94108 Tel: 650-678-1248
SCALE: 1" = 40'		PREPARED BY: WICKS ENGINEERING & SURVEYING 311 N.E. "D" Street Grants Pass, OR 97526 Tel: 541-479-3436 Fax: 541-479-1014
SHEET NO. 1 of 1	RENEWAL DATE: 6-30-16	

EXHIBIT 1

JOSEPHINE COUNTY OFFICIAL RECORDS
TRISHA MYERS, COUNTY CLERK **2016-001947**
DED-WRD 02/16/2016 02:20 PM
Cnt=1 Pgs=5 Stn=2 JEDWARDS
$25.00 $11.00 $10.00 $20.00 $5.00 $71.00

I, Trisha Myers, County Clerk, certify that the within document was received and duly recorded in the official records of Josephine County.

470315043570CW

GRANTOR:
Robert Vernon Jones, III Trustee of The Jones Loving Trust Credit Shelter Trust, as to an undivided 40% Interest and Robert Vernon Jones, III, Trustee of the Jones Loving Trust, Marital Trust, as to an undivided 60% Interest, as tenants in common, as to Parcel 1 and The Jones Loving Trust
61132 Halley Sta
Bend, OR 97702

GRANTEE:
FJM Grants Pass Associates ,LLC a Delaware Limited Liability Company

SEND TAX STATEMENTS TO:
FJM Grants Pass Associates ,LLC
c/o FJM Investments, Inc.
101 Lucas Valley Road Suite 150
San Rafael, CA 94903

AFTER RECORDING RETURN TO:
FJM Grants Pass Associates ,LLC
c/o FJM Investments, Inc.
101 Lucas Valley Road Suite 150
San Rafael, CA 94903

Escrow No: 470315043570-TTJA37

360519DC 2200 / 2800/2900

1555 Williams Hwy 1612 and 1622 Harbeck Road
Grants Pass, OR 97527

SPACE ABOVE THIS LINE FOR RECORDER'S USE

STATUTORY WARRANTY DEED

Robert Vernon Jones, III Trustee of The Jones Loving Trust Credit Shelter Trust, as to an undivided 40% Interest and Robert Vernon Jones, III, Trustee of the Jones Loving Trust, Marital Trust, as to an undivided 60% Interest, as tenants in common, as to Parcel 1 and The Jones Loving Trust, Grantor, conveys and warrants to

FJM Grants Pass Associates ,LLC a Delaware Limited Liability Company, Grantee, the following described real property, free and clear of encumbrances except as specifically set forth below, situated in the County of Josephine, State of Oregon:

PARCEL NO. 1:
Commencing at a point 824.2 feet North and 1331.58 feet West of the Southeast Corner of Section 19, Township 36 South, Range 5 West of the Willamette Meridian, Josephine County, Oregon; thence West to a point on the Westerly right-of-way line of Harbeck Road, said point being the Northeast Corner of a tract of land described in Document No. 81-00963, Official Records of Josephine County, Oregon; thence Northerly, along said right-of-way line, 5.81 feet to a 5/8-inch iron rod set per Survey 165-76 for the true point of beginning; thence Northerly, along said Westerly right-of-way line to the Southeasterly Corner of a tract of land described in Volume 231, Page 1576, Josephine County Mortgage Records; thence Westerly, along the Southerly line of said described tract, to the Easterly right-of-way line of the relocated Murphy-Williams Highway #238; thence Southwesterly, along said right-of-way line to a point which bears South 89° 50' 06" West to the true point of beginning; thence North 89° 50' 06" East to a point 4.98 feet North of the Northwest Corner of a tract of land described in Document No. 81-00963, Official Records of Josephine County, Oregon; thence South 54.98 feet to the Southwest Corner of said described tract; thence Easterly, along the South line thereof, to the Westerly right-of-way line of Harbeck Road; thence Northerly along said right-of-way line to the true point of beginning.

470315043570-TTJA37
Deed (Warranty-Statutory)

The True and actual consideration for this conveyance is $1,195,000.00

EXHIBIT 2

PARCEL NO. 2:
Beginning at a point 773.2 feet North and 1331.4 feet West of the Southeast corner of Section 19, Township 36 South, Range 5 West of the Willamette Meridian, Josephine County, Oregon; thence West 295 feet; thence South 41 feet; thence East 295 feet; thence North 41 feet to the point of beginning.
EXCEPTING THEREFROM that portion conveyed to Josephine County, Oregon, by deed recorded in Volume 273, Page 732, Josephine County Deed Records

PARCEL NO. 3:
Beginning at a point 676.7 feet North and 1331.4 feet West of the Southeast corner of Section 19, Township 36 South, Range 5 West of the Willamette Meridian, Josephine County, Oregon; thence West 295 feet; thence North 53 feet; thence East 295 feet; thence South 53 feet to the point of beginning.
EXCEPTING THEREFROM that portion conveyed to Josephine County, Oregon, by deed recorded in Volume 273, Page 652, Josephine County Deed Records

THE TRUE AND ACTUAL CONSIDERATION FOR THIS CONVEYANCE IS $1,195,000.00. (See ORS 93.030)

Subject to and excepting:

See Attached Exhibit "A" attached hereto and made apart of

BEFORE SIGNING OR ACCEPTING THIS INSTRUMENT, THE PERSON TRANSFERRING FEE TITLE SHOULD INQUIRE ABOUT THE PERSON'S RIGHTS, IF ANY, UNDER ORS 195.300, 195.301 AND 195.305 TO 195.336 AND SECTIONS 5 TO 11, CHAPTER 424, OREGON LAWS 2007, SECTIONS 2 TO 9 AND 17, CHAPTER 855, OREGON LAWS 2009, AND SECTIONS 2 TO 7, CHAPTER 8, OREGON LAWS 2010. THIS INSTRUMENT DOES NOT ALLOW USE OF THE PROPERTY DESCRIBED IN THIS INSTRUMENT IN VIOLATION OF APPLICABLE LAND USE LAWS AND REGULATIONS. BEFORE SIGNING OR ACCEPTING THIS INSTRUMENT, THE PERSON ACQUIRING FEE TITLE TO THE PROPERTY SHOULD CHECK WITH THE APPROPRIATE CITY OR COUNTY PLANNING DEPARTMENT TO VERIFY THAT THE UNIT OF LAND BEING TRANSFERRED IS A LAWFULLY ESTABLISHED LOT OR PARCEL, AS DEFINED IN ORS 92.010 OR 215.010, TO VERIFY THE APPROVED USES OF THE LOT OR PARCEL, TO DETERMINE ANY LIMITS ON LAWSUITS AGAINST FARMING OR FOREST PRACTICES, AS DEFINED IN ORS 30.930, AND TO INQUIRE ABOUT THE RIGHTS OF NEIGHBORING PROPERTY OWNERS, IF ANY, UNDER ORS 195.300, 195.301 AND 195.305 TO 195.336 AND SECTIONS 5 TO 11, CHAPTER 424, OREGON LAWS 2007, SECTIONS 2 TO 9 AND 17, CHAPTER 855, OREGON LAWS 2009, AND SECTIONS 2 TO 7, CHAPTER 8, OREGON LAWS 2010.

DATED: 2/16/2016

Robert Vernon Jones, III Trustee of The Jones Loving Trust Credit Shelter Trust

BY: _____
Robert Vernon Jones, III Trustee

Robert Vernon Jones, III, Trustee of the Jones Loving Trust, Marital Trust

BY: _____
Robert Vernon Jones, III Trustee

Robert Vernon Jones, III Trustee of the Jones Loving Trust dated May 2, 1991, and any amendments thereto

BY: _____
Robert Vernon Jones, III, Trustee

470315043570-TTJA37
Deed (Warranty-Statutory)

470315043570GW

RECORDING REQUESTED BY:

Ticor Title Company of Oregon
1555 E. McAndrews, Suite 100
Medford, OR 97504

GRANTOR:
Robert Vernon Jones, III Trustee of The Jones Loving Trust Credit Shelter Trust, as to an undivided 40% interest and Robert Vernon Jones, III, Trustee of the Jones Loving Trust, Marital Trust, as to an undivided 60% interest, as tenants in common, as to Parcel 1 and The Jones Loving Trust
61132 Halley Sta
Bend, OR 97702

GRANTEE:
FJM Grants Pass Associates ,LLC a Delaware Limited Liability Company

SEND TAX STATEMENTS TO:
FJM Grants Pass Associates ,LLC a Delaware Limited Liability Company
c/o FJM Investments, Inc.
101 Lucas Valley Road Suite 150
San Rafael, CA 94903
AFTER RECORDING RETURN TO:
FJM Grants Pass Associates ,LLC
c/o FJM Investments, Inc.
101 Lucas Valley Road Suite 150
San Rafael, CA 94903
Escrow No: 470315043570-TTJA37

360519DC 2200 / 2600/2900

1555 Williams Hwy 1612 and 1622 Harbeck Road
Grants Pass, OR 97527

JOSEPHINE COUNTY OFFICIAL RECORDS
TRISHA MYERS, COUNTY CLERK **2016-001949**
DED-QTD 02/16/2016 02:20 PM
Cnt=1 Pgs=4 Stn=2 JEDWARDS $66.00
$20.00 $11.00 $10.00 $20.00 $5.00
I, Trisha Myers, County Clerk, certify that the within document was received and duly recorded in the official records of Josephine County.

SPACE ABOVE THIS LINE FOR RECORDER'S USE

STATUTORY QUITCLAIM DEED

Robert Vernon Jones, III Trustee of the Jones Loving Trust Credit Shelter Trust; Robert Vernon Jones, III, Trustee of the Jones loving Trust, Marital Trust and Robert Vernon Jones, III, Trustee of the Jones Loving Trust dated May 2, 1991, and any amendments thereto , Grantor, releases and quitclaims to

FJM Grants Pass Associates, LLC, a Delaware limited liability company, Grantee, all right, title and interest in and to the following described real property situated in the County of Josephine, State of Oregon, to wit:

See Attached Exhibit A for legal description

THE TRUE CONSIDERATION FOR THIS CONVEYANCE IS $0.00. (See ORS 93.030).

BEFORE SIGNING OR ACCEPTING THIS INSTRUMENT, THE PERSON TRANSFERRING FEE TITLE SHOULD INQUIRE ABOUT THE PERSON'S RIGHTS, IF ANY, UNDER ORS 195.300, 195.301 AND 195.305 TO 195.336 AND SECTIONS 5 TO 11, CHAPTER 424, OREGON LAWS 2007, SECTIONS 2 TO 9 AND 17, CHAPTER 855, OREGON LAWS 2009, AND SECTIONS 2 TO 7, CHAPTER 8, OREGON LAWS 2010. THIS INSTRUMENT DOES NOT ALLOW USE OF THE PROPERTY DESCRIBED IN THIS INSTRUMENT IN VIOLATION OF APPLICABLE LAND USE LAWS AND REGULATIONS. BEFORE SIGNING OR ACCEPTING THIS INSTRUMENT, THE PERSON ACQUIRING FEE TITLE TO THE PROPERTY SHOULD CHECK WITH THE APPROPRIATE CITY OR COUNTY PLANNING DEPARTMENT TO VERIFY THAT THE UNIT OF LAND BEING TRANSFERRED IS A LAWFULLY ESTABLISHED LOT OR PARCEL, AS DEFINED IN ORS 92.010 OR 215.010, TO VERIFY THE APPROVED USES OF THE LOT OR PARCEL, TO DETERMINE ANY LIMITS ON LAWSUITS

EXHIBIT "A"

DEED GAP DECRIPTIONS

Two strips of land located in the Southwest Quarter of the Southeast Quarter of Section 19, Township 36 South, Range 5 West of the Willamette Meridian, Josephine County, Oregon. Said strips are more particularly described as follows:

STRIP NO. 1

A 1.0 foot wide deed gap between the tract of land described as Parcel 1of Document No. 2015-7617, Josephine County Official Records (currently designated as Tax Lot 2200, Map No. 36-5-19-DC) and the tract of land described as Tract "A" of Document No. 2015-14943 , Josephine County Official Records (currently designated as Tax Lot 2800, Map No. 36-5-19-DC).

Beginning at a point 773.2 feet North and 1331.4 feet West of the Southeast Corner of said Section 19; thence West along the North Line of said Tract "A" of Document No. 2015-14943, 295 feet; thence North, 1.0 feet, more-or-less, to the Southwest Corner of said Parcel 1 of Document No. 2015-7617; thence East along the South Line of said Parcel 1, 295 feet; thence South, 1.0 feet, more-or-less, to the point of beginning, containing 265 square feet, more-or-less. EXCEPTING THEREFROM that portion conveyed to Josephine County, Oregon for Harbeck Road right-of-way by deeds recorded as Volume 271, Page 665 and Volume 273, Page 732 of the Josephine County Deed Records.

STRIP NO. 2

A 2.5 foot wide deed gap between the tract of land described in Document No. 2015-14942, Josephine County Official Records (currently designated as Tax Lot 2900, Map No. 36-5-19-DC) and the tract of land described as Tract "A" of Document No. 2015-14943, Josephine County Official Records (currently designated as Tax Lot 2800, Map No. 36-5-19-DC).

Commencing at a point 773.2 feet North and 1331.4 feet West of the Southeast Corner of said Section 19; thence South, 41 feet to the TRUE POINT OF BEGINNING of this description; thence West along the South Line of said Tract "A" of Document No. 2015-14943, 295 feet; thence South, 2.5 feet, more-or-less, to the Northwest Corner of the tract of land described in said Document No. 2015-14942; thence East along the North Line of said tract, 295 feet; thence North, 2.5 feet, more-or-less, to the point of beginning, containing 663 square feet, more-or-less. EXCEPTING THEREFROM that portion conveyed to Josephine County, Oregon for Harbeck Road right-of-way by deeds recorded as Volume 273, Page 652 and Volume 273, Page 732 of the Josephine County Deed Records.

Ticor 470315043570

[GAP PARCEL BETWEEN TAX LOTS 2200 AND 2100:]

Commencing at a point 824.2 feet North and 1331.58 feet West of the Southeast Corner of Section 19, Township 36 South, Range 5 West of the Willamette Meridian, Josephine County, Oregon; thence West to a point on the Westerly right-of-way line of Harbeck Road, said point being the Northeast Corner of a tract of land described in Document No. 81-00963, Official Records of Josephine County, Oregon; thence Northerly, along said right-of-way line, 5.81 feet to a 5/8-inch iron rod set per Survey 165-76 for a point of reference; thence Northerly, along said Westerly right-of-way line to the Southeasterly Corner of a tract of land described in Volume 231, Page 1576, Josephine County Mortgage Records; thence Westerly, along the Southerly line of said described tract, to the Easterly right-of-way line of the relocated Murphy-Williams Highway #238; thence Southwesterly, along said right-of-way line to a point which bears South 89° 50' 06" West to the above point of reference; thence, from this point, which is the true point of beginning for this description, North 89° 50' 06" East to a point 4.98 feet North of the Northwest Corner of a tract of land described in Document No. 81-00963, Official Records of Josephine County, Oregon; thence South to the Northeast corner of Parcel 2 of Partition Plat No. 2002-84, records of Josephine County, Oregon; thence Westerly along the Northerly line of said Partition Plat No. 2002-84 to the Easterly right-of-way line of relocated Murphy-Williams Highway #238; thence Northeasterly along said Easterly right-of-way line to the true point of beginning.

AGAINST FARMING OR FOREST PRACTICES, AS DEFINED IN ORS 30.930, AND TO INQUIRE ABOUT THE RIGHTS OF NEIGHBORING PROPERTY OWNERS, IF ANY, UNDER ORS 195.300, 195.301 AND 195.305 TO 195.336 AND SECTIONS 5 TO 11, CHAPTER 424, OREGON LAWS 2007, SECTIONS 2 TO 9 AND 17, CHAPTER 855, OREGON LAWS 2009, AND SECTIONS 2 TO 7, CHAPTER 8, OREGON LAWS 2010.

DATED: 2/11/2016

Robert Vernon Jones, III Trustee of the Jones Loving Trust Credit Shelter Trust

BY: _____
Robert Vernon Jones, III, Trustee

Robert Vernon Jones, III, Trustee of the Jones Loving Trust, Marital Trust

BY: _____
Robert Vernon Jones, III, Trustee

Robert Vernon Jones, III Trustee of the Jones Loving Trust dated May 2, 1991 and any amendments thereto

BY: _____
Robert Vernon Jones, III, Trustee

STATE OF OREGON
County of Deschutes

STATE OF OREGON
County of Deschutes

This instrument was acknowledged before me on ~~2/11~~ Feb 11,

20 16 by Robert Vernon Jones, III as Trustee of The Jones Loving Trust Credit Shelter Trust.

Suzanne M. Dickinson
Notary Public-State of Oregon

OFFICIAL STAMP
SUZANNE MARIE DICKINSON
NOTARY PUBLIC-OREGON
COMMISSION NO. 942780
MY COMMISSION EXPIRES SEPTEMBER 22, 2019

STATE OF OREGON
County of Deschutes

This instrument was acknowledged before me on Feb 11,

20 16 by Robert Vernon Jones, III as Trustee of the Jones Loving Trust, Marital Trust.

Suzanne M. Dickinson
Notary Public-State of Oregon

OFFICIAL STAMP
SUZANNE MARIE DICKINSON
NOTARY PUBLIC-OREGON
COMMISSION NO. 942780
MY COMMISSION EXPIRES SEPTEMBER 22, 2019

This instrument was acknowledged before me on 2/11

20 16 by Robert Vernon Jones, III as Trustee of The Jones Loving Trust dated May 2, 1991.

Suzanne M. Dickinson
Notary Public-State of Oregon

OFFICIAL STAMP
SUZANNE MARIE DICKINSON
NOTARY PUBLIC-OREGON
COMMISSION NO. 942780
MY COMMISSION EXPIRES SEPTEMBER 22, 2019

470316043570-TTJA37
Deed (Quitclaim – Statutory Form)

Item: Ordinance entering into a Development Agreement (2016-01) with Stutzman Investments, LLC for property located at 1741 Dowell Road.

Date: April 20, 2016

SUBJECT AND SUMMARY:

This proposal is to enter into a Development Agreement with Stutzman Investments, LLC for property located at 1741 Dowell Road.

RELATIONSHIP TO COUNCIL GOALS:

This supports Council's goal to **FACILITATE SUSTAINABLE, MANAGEABLE GROWTH**. The new Development Agreement will allow Stutzman Investments, LLC to complete the proposed expansion and accommodate future expansions on the subject property.

CALL TO ACTION SCHEDULE:

Call to action schedule: N/A.

BACKGROUND:

The subject property is located at 1741 Dowell Road in the General Commercial (GC) zoning district and is part of the Rogue Truss assembly plant and Farmers Building Supply. The truss plant is classified as an indoor industrial use. Indoor industrial uses are not permitted uses in the GC zoning district. The use was in operation prior to being incorporated in City limits and is considered a legally nonconforming use.

A legally nonconforming use may expand, but the use is limited to a "one time only" expansion pursuant to Section 15.042 of the Development Code. The owners were approved for a one-time expansion to the nonconforming use in 2001.

The owner of the property has applied for a Minor Site Plan Review for approval of an expansion to an existing structure. The Development Agreement will allow the property owner to complete the proposed building addition and will require an application for a zone change from GC to Business Park (BP). The BP zoning district permits industrial and retail uses, bringing the uses into conformance and providing the property owners with the ability to expand the use in the future.

ITEM: 2.c. ORDINANCE ENTERING INTO A DEVELOPMENT AGREEMENT (2016-01) WITH STUTZMAN INVESTMENTS, LLC FOR PROPERTY LOCATED AT 1741 DOWELL ROAD.

Staff Report (continued):

COST IMPLICATION:

No additional costs are associated with this action.

ALTERNATIVES:

- Approve the ordinance as proposed, or
- Deny the ordinance

RECOMMENDED ACTION:

It is recommended the Council approve the attached ordinance entering into Development Agreement (2016-01).

POTENTIAL MOTION:

I move to approve the ordinance entering into a Development Agreement with Stutzman Investments, LLC for property located at 1741 Dowell Road.

ORDINANCE NO.

AN ORDINANCE OF THE COUNCIL OF THE CITY OF GRANTS PASS ENTERING INTO A DEVELOPMENT AGREEMENT (2016-01) WITH STUTZMAN INVESTMENTS, LLC FOR PROPERTY LOCATED AT 1741 DOWELL ROAD.

WHEREAS:

1. The Comprehensive Plan of the City of Grants Pass was adopted December 15, 1982. The Development Code of the City of Grants Pass was adopted August 17, 1983; and

2. The owner of the subject property has applied to the City of Grants Pass for approval of an expansion of an existing structure which is located in the General Commercial (GC) zone, at 1741 Dowell Road (36-06-24-CC, TL 1300); and

3. Existing use on the property is classified as Indoor Industrial. Indoor Industrial is not a permitted use in the General Commercial (GC) zone as listed in Schedule 12-2 of the Development Code; and

4. The Grants Pass Development Code permits a one-time expansion to nonconforming uses. The owner was approved for expansion in 2001 (City File No. 01-20100058); and

5. Entering into a Development Agreement with Stutzman Investments, LLC will allow the owner to apply for a zone change from GC to Business Park (BP). The BP zoning district permits industrial and retail uses, bringing the uses into conformance and providing the property owners with the ability to expand the use in the future.

NOW, THEREFORE, THE CITY OF GRANTS PASS HEREBY ORDAINS:

Section 1: The City hereby adopts Development Agreement 2016-01 for property described as 36-06-24-33, TL 1300 (Parcel 3 of Partition Plat 2009-13), attached as Exhibit "1".

ADOPTED by the Council of the City of Grants Pass, Oregon, in regular session this 20th day of April 2016 with the following specific roll call vote:

AYES:

NAYS: **ABSTAIN:** **ABSENT:**

SUBMITTED to and _____ by the Mayor of the City of Grants Pass, Oregon, this ____ day of April 2016.

_____
Darin Fowler, Mayor

ATTEST:

_____ Date submitted to Mayor: _____
Karen Frerk, City Recorder

Approved as to Form, Mark Bartholomew, City Attorney _____

After Recording Return To:
City of Grants Pass, Oregon
101NW A Street
Grants Pass OR 97526
Attn: Lora Glover

DEVELOPMENT AGREEMENT # *2016-01*
(ORS 94.528)

BETWEEN:	City of Grants Pass, an Oregon municipal corporation	**("City")**
AND:	Stutzman Investments LLC, a limited liability company; its successors, assigns and any other person or entity authorized to develop or apply for development approval on the Property.	**("Owner")**

RECITALS

A. Owner owns approximately 6.63 acres of real property, described as 36-06-24-33, Tax Lot 1300 (Parcel 3 of Partition Plat 2009-13) located in the City of Grants Pass, more specifically identified in the legal description attached to this Development Agreement ("this Agreement") as ***Exhibit A*** (the "Property") and as illustrated in ***Exhibit B***.

B. Owner has applied to City for approval of a Minor Site Plan Review for a 25% expansion of an existing structure (City File No. 201-00101-16 (the "Application")).

C. The Property has comprehensive plan map designations of General Commercial (GC) and is zoned General Commercial (GC-1).

D. Existing uses the on property include a truss assembly plant, which is classified as Indoor Industrial. Indoor Industrial is not a permitted use in the General Commercial zoning district.

E. The Application is to expand nonconforming use. Section 15.042 of the Grants Pass Development Code (GPDC) permits a one-time expansion to nonconforming uses. The owner was approved for expansion in 2001 (City File No. 01-20100058).

F. City and Owner wish to accommodate future expansions on Property and create a means of compliance.

G. ORS 94.504 and 94.528 authorizes development agreements as a means and mechanism

AGREEMENT

NOW THEREFORE, based on the foregoing recitals, the City Council, for City and Owner, hereby agree to the following:

1. **Duration of Agreement.** This Development Agreement shall be in effect for the term of the Development Permit for a 25% expansion to an existing structure. The "Expiration Date" is two and one half (2 ½) years after the Effective Date.

2. **Minor Site Plan Application Approval**. City hereby approves the Application (201-00101-16) presented by Owner as reflected in Director's Decision, for 480 square foot addition to an existing structure, which constitutes a 25% expansion ("Approval").

3. **Development Conditions:**
   a. Development on the Property shall meet all applicable City standards at the time a development application is made, including appropriate design standards.
   b. Owner must submit application for Comprehensive Plan and Zone Map Amendment ("Amendment") application to amend zoning of Property from General Commercial (GC-1) to Business Park (BP).
   c. The application for Amendment must be received prior to completion inspections or issuance of Certificate of Occupancy for construction as presented in the Approval.

4. **Permitted Uses.** Owner shall be allowed to make such uses of Property as allowed under current zoning of Property.

5. **Density of Use/Intensity of Use.** Owner may make such uses to such density and intensity as under the current zoning of Property.

6. **Height/Size of Structures.** The maximum height for buildings and structures on property shall be 35 feet. Per GPDC 12.254. The maximum square footage of structures on the property shall be unlimited. These parameters shall remain in effect throughout the duration of this Agreement.

7. **Reservation or Dedication of Land.** Owner shall not be required to reserve or dedicate land as a condition of this Agreement. Owner shall be required to reserve or dedicate land in the future only if as a condition to any future application and only if such reservation or dedication is proportionate and reasonably related to the application.

8. **Fees and Charges.** The fees and charges for future development of the Property shall be those fees and charges in effect at the time of any further application for development permits, building permits or other applications.

9. **Compliance Review.** The submittal of land use applications for further development of the property shall be reviewed according to the GPDC and applicable state requirements effective at the time the applications are submitted. Provided an application submitted prior to the expiration of this Agreement, any such application shall be reviewed and approved under the terms of this Agreement.

10. **Infrastructure and Services.** Owner shall comply with all existing City ordinances and rules regarding the extension of services to the property and for ongoing provision of services. Owner reserves the right to apply for and be a participant in any reimbursement district, deferred development agreement and so on without limitation. Owner reserves the right to apply for and receive Systems Development Charges credits.

11. **Changes in Law.** When changes in the GPDC, Comprehensive Plan or other applicable state, county or City law or rule renders compliance with this Agreement impossible or unlawful, Owner shall consider and sign amendments to this Agreement to make this Agreement conform to the laws.

12. **Remedies Available to the Parties.** Either party, upon breach of this Agreement by the other, shall have available to them all remedies at law or in equity available for a breach of contract including but not limited to damages and injunctive and declaratory relief.

13. **Assignment.** This Agreement shall be binding upon the successors and assigns of the parties hereto provided however, that an assignment by Owner shall be subject to the prior written approval of City, which consent shall not be unreasonably withheld.

14. **Annexation.** The property is currently within the city limits of the City of Grants Pass and therefore unaffected in any way by any annexation in the future.

15. **Future Discretionary Approvals.** Future discretionary approvals shall be subject to the existing rules and regulations.

16. **Commencement of Construction.** Owner may commence construction at any time so long as the necessary applications are submitted to the City prior to the Expiration Date and construction commences within 180 days of approval.

17. **Binding Effect.** This Agreement is binding upon and shall enure to the benefit of the City and Owner and its permitted assigns for the Duration of the Agreement, which is two and one half years.

18. **Ordinance Approving this Agreement.** This Agreement was authorized by ordinance number _____ adopted by the Council of the City of Grants Pass on _____, 2016.

19. **Miscellaneous.**

19.1 This Agreement may be amended only by mutual consent of the parties hereto or their successors in interest and such amendment shall be reduced to writing.

19.2 Any litigation arising out of pertaining to this Agreement shall be heard and decided in the Josephine County, Oregon Circuit Court.

IN WITNESS WHEREOF, the parties have executed this Development Agreement in duplicate, intending that it may be effective as of the date it is recorded.

Executed this 23 day of March, 2016

CITY:

City of Grants Pass

By: Aaron K. Cubic
Name: Aaron K. Cubic
Title: City Manager

OWNERS:

Stutzman Investments LLC

By: Mark S. Stutzman
Name: MARK S. STUTZMAN
Title: OWNER

STATE OF OREGON)
) SS
County of Josephine)

This instrument was acknowledged before me by Aaron Cubic, as City Manager of the City of Grants Pass, Oregon this 23 Day of March, 2016.

Karen B. Frerk
Notary Public for Oregon
My commission expires: 2/24/17

OFFICIAL SEAL
KAREN B FRERK
NOTARY PUBLIC - OREGON
COMMISSION NO. 475979
MY COMMISSION EXPIRES FEBRUARY 24, 2017

STATE OF OREGON)
) SS.
County of Josephine)

This instrument was acknowledged before me by Mark Stutzman, as _____, of Stutzman Investments, LLC.

Karen B. Frerk
Notary Public for Oregon
My commission expires: 2/24/17

OFFICIAL SEAL
KAREN B FRERK
NOTARY PUBLIC - OREGON
COMMISSION NO. 475979
MY COMMISSION EXPIRES FEBRUARY 24, 2017

Legal Description

Parcel 3 Partition Plat 2009-13, Sec 24 T 36 S R 6 W, W.M. Josephine County, Oregon

EXHIBIT A

CITY OF GRANTS PASS

36-06-24-CC, TL 1300

Legend

Subject Parcel

0 50 100 200 300 400 Feet

N

CITY OF GRANTS PASS
Parks & Community Development Dept.
101 Northwest "A" Street
Grants Pass, OR 97526
Phone: (541) 450-6060
Fax: (541) 476-9218
Web: www.grantspassoregon.gov

March 30, 2016

DISCLAIMER: The Geographic Information Systems (GIS) data [illegible]

EXHIBIT B

Item: Ordinance amending Article 12, Schedule 12-2: listing where Self-Storage and Warehouse facilities are permitted; amending Article 14: creating standards for Self-Storage facilities in general commercial and residential zones; and amending Article 30: creating definitions for Self-Storage and Warehouse.

Date: April 20, 2016

SUBJECT AND SUMMARY:

This Development Code Text Amendment adds definitions for Self-Storage and Warehouse to Article 30; lists where Self-Storage and Warehouse facilities are permitted in Article 12, Schedule 12-2; and creates standards for Self-Storage facilities in general commercial and residential zones in Article 14.

RELATIONSHIP TO COUNCIL GOALS:

This supports Council's goals to **FACILITATE SUSTAINABLE, MANAGEABLE GROWTH** by providing clear and consistent standards for development and to **ENCOURAGE ECONOMIC OPPORTUNITIES** by preserving industrial land for employment uses.

CALL TO ACTION SCHEDULE:

Call to action schedule: N/A.

BACKGROUND:

Currently, there is no definition for either Self-Storage or Warehouse facilities in the Development Code. Because the two uses are not defined separately, they are grouped into the larger category of 'Industrial, Indoor' uses for the purpose of determining where and how they can be developed. Since 'Industrial, Indoor' uses are only permitted in the Business Park (BP), Industrial Park (IP), and Industrial (I) zones, Self-Storage facilities have been forced into the industrial zones. Self-Storage and Warehouse facilities are two distinctly different uses. By defining them separately, the City will have the ability to allow them to be more appropriately located.

ITEM: 2.d. ORDINANCE AMENDING ARTICLE 12, SCHEDULE 12-2: LISTING WHERE SELF-STORAGE AND WAREHOUSE FACILITIES ARE PERMITTED; AMENDING ARTICLE 14: CREATING STANDARDS FOR SELF-STORAGE FACILITIES IN GENERAL COMMERCIAL AND RESIDENTIAL ZONES; AND AMENDING ARTICLE 30: CREATING DEFINITIONS FOR SELF-STORAGE AND WAREHOUSE.

Staff Report (continued):

The proposed text amendments will allow Warehouse facilities to continue to be permitted in the same zones they are currently; BP, IP, & I. Self-Storage facilities will be permitted as a primary use in BP and IP zones. In an effort to help preserve industrial lands for employment uses, Self-Storage facilities will no-longer be permitted in I zones. They will however, be permitted as a secondary use in General Commercial (GC-1 & GC-2) and all residential zones, provided they meet certain criteria. Those criteria have been drafted as a part of the proposed text amendment in order to help mitigate any negative effects storage facilities could have in these commercial and residential zones.

COST IMPLICATION:

None.

ALTERNATIVES:

1. Approve the proposal as recommended by the UAPC with the additional revisions recommended by staff;
2. Approve the proposal as recommended by the UAPC;
3. Approve the proposal with revisions;
4. Deny the request and not adopt the amendment;
5. Postpone the item indefinitely; or
6. Postpone the item to a time certain

RECOMMENDED ACTION:

It is recommended the Council approve the attached ordinance.

POTENTIAL MOTION:

I move to approve the Ordinance amending Article 12, Schedule 12-2: listing where Self-Storage and Warehouse facilities are permitted; amend Article 14: creating standards for Self-Storage facilities in general commercial and residential zones; and amend Article 30: creating definitions for Self-Storage and Warehouse.

CITY OF GRANTS PASS
PARKS & COMMUNITY DEVELOPMENT DEPARTMENT

DEVELOPMENT CODE TEXT AMENDMENT
SELF-STORAGE & WAREHOUSE
ARTICLE 12 ~ ZONING DISTRICTS, ARTICLE 14 ~ CERTAIN USES, & ARTICLE 30 ~ DEFINITIONS

STAFF REPORT – CITY COUNCIL

Procedure Type:	Type IV: Planning Commission Recommendation and City Council Decision
Project Number:	405-00006-15
Project Type:	Development Code Text Amendment
Applicant:	City of Grants Pass
Planner Assigned:	Joe Slaughter
Application Received:	December 30, 2015
Application Complete:	January 8, 2016
Date of Staff Report:	February 16, 2016 & March 15, 2016
Date of UAPC Hearing:	February 24, 2016 & March 23, 2016
Date of UAPC Findings:	March 23, 2016
Date of Council Staff Report:	April 12, 2016
Date of Council Hearing:	April 20, 2016

I. PROPOSAL:

A Development Code Text Amendment adding definitions for Self-Storage and Warehouse to Article 30; listing where Self-Storage and Warehouse facilities are permitted in Article 12, Schedule 12-2; and creating standards for Self-Storage facilities in general commercial and residential zones in Article 14 ***(See Exhibit 1).***

II. AUTHORITY AND CRITERIA:

Section 4.102 of the City of Grants Pass Development Code provides that the Director, Planning Commission or City Council may initiate a text amendment. The amendment has been initiated by the Director.

Section 2.062 authorizes the Planning Commission to make a recommendation to the City Council and authorize the City Council to make a final decision on an application for a Development Code Text Amendment, pursuant to the requirements of a Type IV procedure.

The text of the Development Code may be recommended for amendment and amended provided the criteria in Section 4.103 of the Development Code are met.

III. APPEAL PROCEDURE:

The City Council's final decision may be appealed to the State Land Use Board of Appeals (LUBA) as provided in state statutes. A notice of intent to appeal must be filed with LUBA within 21 days of the Council's written decision.

IV. BACKGROUND AND DISCUSSION:

Currently, there is no definition for either Self-Storage or Warehouse facilities in the Development Code. Because the two uses are not defined separately they are grouped into the larger category of 'Industrial, Indoor' uses for the purpose of determining where and how they can be developed. Since 'Industrial, Indoor' uses are only permitted in the Business Park (BP), Industrial Park (IP), and Industrial (I) zones, Self-Storage facilities have been forced into the industrial zones. Self-Storage and Warehouse facilities are two distinctly different uses and by defining them separately the City will have the ability to allow them to be more appropriately located.

The proposed text amendments will allow Warehouse facilities to continue to be permitted in the same zones they are currently; BP, IP, & I. Self-Storage facilities will be permitted as a primary use in BP and IP zones. In an effort to help preserve industrial lands for employment uses, Self-Storage facilitates will no-longer be permitted in I zones. They will however, be permitted as a secondary use in General Commercial (GC-1 & GC-2) and all residential zones, provided they meet certain criteria. Those criteria have been drafted as a part of the proposed text amendment in order to help mitigate any negative effects storage facilities could have in these commercial and residential zones.

The Urban Area Planning Commission (UAPC) considered the proposed amendment at their February 24, 2016 meeting. At that meeting the staff report was presented, a public hearing was conducted, and the UAPC discussed the proposed amendments and directed staff to return to the March 23, 2016 meeting of the UAPC ready to discuss how the proposed text amendment could help to address the need for storage in existing residential neighborhoods.

The intent of the proposed text amendment is to allow differentiation in the development review for, and the locating of, Self-Storage and Warehouse facilities. Once Self-Storage and Warehouse are defined as two different uses Warehouse facilities will continue to be located in all industrial zones (BP,IP & I) while Self-Storage facilities will no-longer be permitted in I zones. This will help to preserve prime industrial land for employment uses. The proposed changes will also add flexibility in the siting of Self-Storage facilities by allowing them to be developed in general commercial and residential zones. This will allow for these kinds of storage facilities to be more conveniently located for the mostly residential customers who use them. Because Self-Storage facilities could present negative effects in general commercial and residential zones without special consideration, the proposed text amendments include specific siting criteria for these facilities in general commercial and residential zones.

The concern presented by the UAPC at the February 24, 2016 meeting centered on the applicability of the proposed text amendment for existing residential neighborhoods. Since the proposed text amendment was meant to provide an opportunity for Self-Storage facilities in residential neighborhoods, while at the same time trying to mitigate the negative effects commercial storage could have in residential neighborhoods, certain restrictions were put in place to limit how these Self-Storage facilities could be operated in residential zones. While it is true that these provisions of the code could most likely be addressed more easily in new

residential developments and multi-family residential complexes, the code does not preclude the development of Self-Storage facilities in existing residential neighborhoods. Staff revised the proposed text amendment, adding "for example:" prior to the list of residential types in Section 14.720 to make more clear that the list is not all inclusive, and that other types of residential developments (not listed) could also use these provisions.

The UAPC believed this to be a reasonable approach to allowing Self-Storage facilities in residential zones without opening residential zones to unrestricted commercial storage.

V. CONFORMANCE WITH APPLICABLE CRITERIA:

The Planning Commission's findings of conformance with applicable criteria are provided in Section VII of their Findings of Fact (attached as Exhibit 2).

VI. RECOMMENDATION:

The Urban Area Planning Commission recommends that the City Council **APPROVE** the proposed Comprehensive Plan amendment as presented.

VII. CITY COUNCIL ACTION:

A. Positive Action: Approve the request:
   1. as submitted and recommended by the Planning Commission, with the additional revisions recommended by staff
   2. as submitted and recommended by the Planning Commission
   3. as modified by the City Council (list):

B. Negative Action: Deny the request for the following reasons (list):

C. Postponement: Continue item
   1. indefinitely.
   2. to a time certain.

NOTE: This is a legislative decision. State law does ***not*** require that a decision be made on the application within 120 days.

VIII. INDEX TO EXHIBITS:

1. Updated mark-up text for:
   A. Article 12, Schedule 12-2
   B. Sections 14.700 – 14.720
   C. Sections 30.020

2. Planning Commission Findings of Fact and the Attached Record

   A. Planning Commission Supplemental Staff Report and Exhibits
      1. Schedule 12-2, Sections 14.700-14.720, and Section 30,020

B. Minutes of the March 23, 2016 Planning Commission Hearing not available, audio recording did not work

C. PowerPoint Presentation from March 23, 2016 Planning Commission Hearing

D. Planning Commission Staff Report and Exhibits
   1. Schedule 12-2, Sections 14.700-14.720, and Section 30,020

E. Minutes of the February 24, 2016 Planning Commission Hearing

F. PowerPoint Presentation from February 24, 2016 Planning Commission Hearing

Exhibit 1A

Article 12: Zoning Districts

****

Schedule 12-2. Permitted Uses and Site Plan Review Procedures																
	Zoning Districts															
	RESIDENTIAL								COMMERCIAL					INDUSTRIAL		
	LR	MR		HR		HRR			COMMERCIAL					EMPLOYMENT		
Land Use Types	R-1-12 R-1-10 R-1-8	R-1-6	R-2	R-3 (R-3-1)	R-3-2 (p)	R-4 (R-4-1)	R-4-2 (l)(p)	R-5 (l)(p)	NC	GC (GC-1)	GC-2 (m)(p)	CBD	OR (n)	BP	IP	I (c)

****

4) Services																
a) Professional Office	PUD (k)	PUD (k)	PUD (k)	PUD (k)	PUD (k)	P-II	S-II	S-II	-	P-(a)	P-(a)	P-(a)	P-(a)	P-(b)	P-(b) (q)	-
b) Business Office	PUD (k)	PUD (k)	PUD (k)	PUD (k)	PUD (k)	PUD (k)	PUD (k)	PUD (k)	-	P-(a)	P-(a)	P-(a)	P-(a)	P-(b)	-	-
c) Limited Office	P-II	P-II	P-II	P-II	P-II	P-II	S-II	S-II	-	-	-	-	-	-	-	-
d) Repair, Maintenance, Commercial	-	-	-	-	-	-	-	-	-	P-(a)	P-(a)	P-(a)	-	P-(b)	-	P-(b)
e) Auto Service Station	-	-	-	-	-	-	-	-	-	P-(a)	P-(a)	-	-	P-(b)	-	-
f) Commercial Eating/Drinking Establishment	PUD (k)	PUD (k)	PUD (k)	PUD (k)	PUD (k)	PUD (k)	PUD (k)	PUD (k)	P-(a)	P-(a)	P-(a)	P-(a)	-	P-(b)	-	-
g) Hotel/Motel	-	-	-	-	-	-	-	-	-	P-(a)	P-(a)	P-(a)	-	-	-	-
h) RV Parks	-	-	-	-	-	-	-	-	-	P-III	P-III	-	-	-	-	-
i) Day Care/Family, per 14.310	S-I-A	S-I-A	S-I-A	S-I-A	S-I-A	S-I-A	S-I-A	S-I-A	S-I-A (g)(o)	S-I-A	S-I-A	S-I-A	PUD	S-I-A (g)	S-I-A (g)	S-I-A (g)
j) Day Care/Group, per 14.320	P-II	P-II	P-II	P-II	P-II	P-II	P-II	P-II	-	P-II	P-II	P-II	-	P-II	-	-
k) Group Care	PUD (k)	PUD (k)	PUD (k)	P-III	P-III	P-III	P-III	P-III	-	P-(a)	P-(a)	P-(a)	-	-	-	-
l) Hospitals	-	-	-	-	-	P-III	S-III	S-III	-	P-III	P-III	-	-	-	-	-
m) Vet. Clinics	-	-	-	-	-	-	-	-	-	P-(a)	P-(a)	-	-	P-(b)	-	-
n) Commercial Accessory -Building -Use	- -	- -	- -	- -	- -	- -	- -	- -	S-(h) S-EX	S-(h) S-EX	S-(h) S-EX	S-(h) S-EX	S-(h) S-EX	S-(h) S-EX	- -	- -
o) Bed & Breakfast, per 14.420	P-III	P-III	P-III	P-III	P-III	P-II	S-II	S-II	-	P-(a)	P-(a)	P-(a)	-	-	-	-
p) Voluntary Parking -Local Impact -Area Impact	- -	- -	P-II P-III	P-II P-III	P-II P-III	P-II P-III	- -	- -	- -	- -	- -	- -	- -	- -	- -	- -
q) Personal Service	PUD (k)	PUD (k)	PUD (k)	PUD (k)	PUD (k)	P-II	S-II	S-II	P-(a)	P-(a)	P-(a)	P-(a)	P-(a)	P-(b)	-	-
r) Self-Storage	S-(a)(s)	S-(a)(s)	S-(a)(s)	S-(a)(s)	S-(a)(s)	S-(a)(s)	S-(a)(s)	S-(a)(s)		S-(a)(r)	S-(a)(r)			P-(a)	P-(a)	
~~r~~s) Social Services Facility	-	-	-	-	-	-	-	-	-	-	-	-	-	P-III	-	P-III

****

7) Industrial																
a) Repair Maintenance, Industrial	-	-	-	-	-	-	-	-	-	-	-	-	-	P-(b)	-	P-(b)
b) Indoor	-	-	-	-	-	-	-	-	-	-	-	-	-	P-(b)	P-(b)	P-(b)
c) Outdoor	-	-	-	-	-	-	-	-	-	-	-	-	-	-	-	P-(b)
d) Prohibited	-	-	-	-	-	-	-	-	-	-	-	-	-	X	X	X
e) Industrial Accessory -Building -Use	 - -	 - -	 - -	 - -	 - -	 - -	 - -	 - -	 - -	 - -	 - -	 - -	 - -	 S-(h) S-I-EX	 S-(h) S-I-EX	 S-(h) S-I-EX
f) Outdoor Storage	-	-	-	-	-	-	-	-	-	-	-	-	-	P-II	-	P-II
g) Warehouse														P-(b)	P-(b)	P-(b)

****

Table Legend:

P = Permitted Use
S = Secondary Use. Secondary uses are allowed as a permitted use, but only when provided in conjunction with permitted uses as specified in Section ~~XX~~12.028(2)
- = Use Not Permitted
X = Use Specifically Prohibited (Uses defined in Article 30 as "Industrial, Prohibited")
C = Use Conditionally Permitted (See Article 16)
PUD = Planned Unit Development

I-EX = Type I Procedure, Exempt from Development Permit Review, Section 2.033
I-AU = Type I Procedure, Administrative Use Permit Review Only, Section 2.034
I-A= Type I Procedure, Building Permit Serves as Development Permit, Section 2.035
I-B= Type I Procedure, Director's Decision without Comment Period, Section 2.036
I-C= Type I Procedure, Director's Decision with Comment Period, Section 2.037
II = Type II Procedure, Hearings Officer's Decision, Section 2.040
III = Type III Procedure, Planning Commission's Decision, Section 2.050
IV-A = Type IV Procedure, City Council Decision without Planning Commission Recommendation, Section 2.060
IV-B = Type IV Procedure, City Council Decision with Planning Commission Recommendation, Section 2.060
V = Type V Procedure, Joint Board of County Commissioners & City Council Decision with Planning Commission Recommendation, Section 2.070

Table Notes:

(a) A Type II Procedure is required if the subject property adjoins a residential zone, otherwise a Type I-C Procedure is required.

(b) A Type II Procedure is required if the subject property adjoins a residential or commercial zone, otherwise Type I-C Procedure is required.

(c) If within the Spalding Regionally Significant Industrial Area (RSIA) Overlay, an applicant can request an Expedited Industrial Site Plan Review procedure; otherwise procedures within Schedule 12-2 apply.

(d) Type I-A, except the following are exempt (Type I-EX): operation, maintenance, repair, and preservation of existing transportation facilities; dedication or public acquisition of rights-of-way and easements; authorization of construction and construction of facilities and improvements, where the improvements are within the existing right-of-way or easement area or are consistent with clear and objective dimensional standards; and emergency measures necessary for the safety and protection of property.

(e) Manufactured Dwelling Parks are not permitted in commercial or industrial zones or commercial or industrial Comprehensive Plan land use districts. Siting of an individual home within an approved manufactured dwelling park requires a Type I-A procedure.

(f) An existing residential dwelling unit is a permitted use in this zone. In zones where a new residential dwelling unit is not a permitted use, this provision allows the existing residential dwelling unit to continue or expand without being subject to the nonconforming <u>use</u> provisions of the Development Code. There may be nonconforming <u>**development**</u> provisions that are applicable. If an existing dwelling unit is removed in a zone where a new dwelling unit is not permitted, it shall not be replaced.

In zones where a new residential dwelling unit is not a permitted use, this provision does not allow for expansion that increases the number of dwelling units.

(g) In zones where a new residential dwelling unit is not a permitted use, this provision allows for this use associated with the existing residential dwelling as authorized in Article 14.

(h) A commercial or industrial accessory building of 400 square feet or less that comprises less than 25 percent of the existing floor area of buildings and meets the definition of a minor modification in Section 19.058 of this Code is reviewed through a Type I-A procedure. All other commercial or industrial accessory buildings are subject to the applicable site plan review procedures.

A watchman's cottage is permitted as a new residential dwelling unit if it serves a direct industrial function. (12.341)

(i) A Type I-A Procedure is required for water and sewer pump stations. All other minor public facilities are reviewed through the procedure specified in table.

(j) A Type III Procedure is required if the tower height exceeds the zone height limit, otherwise a Type II Procedure is required.

(k) Trade and service uses permitted through a PUD in residential zones are subject to the limitations in Article 18.

(l) In the R-4-2 and R-5 zones, office uses are Secondary Uses, See Section 12.050

(m) In the GC-2 zone, residential uses are Secondary Uses, See Section 12.050

(n) In the OR zone, residential uses are Secondary Uses, See Section 12.050

(o) In the NC zone, upper-story residential uses are Secondary Uses, See Section 12.050

(p) In addition to the uses listed in Schedule 12-2, the following shall be permitted as primary uses rather than only as secondary uses or as part of a PUD in the specified zone, subject to all applicable provisions of this Code:

1. **R-3-2 zone.**

a. One single-family detached dwelling on an existing lot of record, and permitted accessory uses, including an accessory dwelling unit, meeting the requirements of this section.
b. The existing lot of record shall be existing on or before November 12, 2014, or shall be a lot or parcel that was part of an approved land division application which was submitted on or before November 12, 2014.
c. This shall include replacement of an existing single-family detached dwelling on a lot of record meeting the requirements of this section.

2. **R-4-2 and R-5 zones.**
   a. One single-family detached dwelling on an existing lot of record, and permitted accessory uses, including an accessory dwelling unit, meeting the requirements of this section.
   b. One duplex, two detached single-family dwellings, or division of a lot of record described below to include two attached units (with one common zero-lot line), subject to all applicable building code, utility, and Development Code requirements.
   c. The existing lot of record shall be existing on or before November 12, 2014, or shall be a lot or parcel that was part of an approved land division application which was submitted on or before November 12, 2014 which has not expired.
   d. This shall include replacement of an existing dwelling on a lot of record meeting the requirements of this section.

3. **GC-2 zone.**
   a. One single-family detached dwelling on an existing lot of record, and permitted accessory uses, including an accessory dwelling unit, meeting the requirements of this section.
   b. The existing lot of record shall be existing on or before November 12, 2014, or shall be a lot or parcel that was part of an approved land division application which was submitted on or before November 12, 2014.
   c. This shall include replacement of an existing single-family detached dwelling on a lot of record meeting the requirements of this section.

(q) Professional Office use permitted in the Industrial Park District only when subject property is located within the Medical Overlay District.

(r) Self-Storage in General Commercial zones shall meet the standards in Section 14.710

(s) Self-Storage in Residential zones shall meet the standards in Section 14.720

****

Exhibit 1B

Article 14: Certain Uses

****

14.700 Self-Storage in General Commercial and Residential Zones

The review procedure for Self-Storage shall be as provided in Schedule 12-2

14.710 Development Standards for Self-Storage in General Commercial Zones

(1) An approved primary use or uses must exist on the same property between the Self-Storage and all street frontages.

(2) The approved primary use(s) must be in a building or buildings totaling at least 2,500 square feet in area.

(3) The building(s) containing the approved primary use(s) shall be oriented to obscure view of the Self-Storage from all rights-of-way to the greatest extent practical.

(4) All buildings containing the approved primary uses(s) must meet the Architectural Standards in Section 20.400-20.495.

(5) The development of the site must meet Article 23 Landscaping and Buffering Development Standards.

(6) The development must meet all other applicable provisions of this Code.

14.720 Development Standards for Self-Storage in Residential Zones

(1) Self-Storage in residential zones shall only be made available for use by residents of the residential development (**for example:** multi-family complex, residential subdivision, PUD) containing the Self-Storage facility. At no time is the Self-Storage facility permitted to serve non-residents.

(2) Self-Storage in residential zones shall be maintained and operated by the owner of the complex in the case of multi-family developments held in common ownership, and by a legally formed homeowners association in the case of residential developments held in separate ownership (**for example:** residential subdivision, PUD, condominium).

(3) The Self-Storage buildings shall be built in a location and manner that obscures their view from all rights-of-way and paths to the greatest extent practical.

(4) The development of the site must meet Article 23 Landscaping and Buffering Development Standards. The Self-Storage facility must meet the Commercial standards for Landscape and Buffering.

(5) The development must meet all other applicable provisions of this Code.

Exhibit 1C

Article 30: Definitions

****

30.020 Definitions

****

School: Facilities for the instruction of children, youth and adults. School uses are of two types:

(1) Public: Public, private or parochial, kindergarten, primary, secondary and high schools and colleges, including accessory administrative uses, but not child care facilities, except when operated in conjunction with a school.

(2) Technical: Technical, business, trade, dancing, music or sports schools, including accessory administrative uses.

Self-Storage: A commercial facility in which customers can rent space to store possessions; or

A storage facility in a residential neighborhood or development which, in accordance with Section 14.720, is only available for use by the residents of that neighborhood or development.

Service Station: An establishment selling fuel and oil for vehicles; selling, servicing and installing tires, batteries, accessories and related products; furnishing minor repair and service when conducted entirely within an enclosed building, and at which incidental services are conducted. "Minor repair and service," as used in this definition, shall be understood to exclude activities such as painting, bodywork, steam cleaning, and/or tire recapping.

****

Visual Obstruction: Any fence, hedge, tree, shrub, device, wall or structure between the elevations of 2 1/2 feet and 8 feet above the adjacent curb height or above the elevation of gutter line of street edge where there is no curb, as determined by the City Engineer, and so
located at a street, drive, or alley intersection as to limit the visibility of pedestrians or persons in motor vehicles on said streets, drives, or alleys.

Warehouse: A large building for storing items before they are sold, used, or sent out to retail shops.

Watchman's Cottage: See "Residential Uses in Industrial Zones."

****

Exhibit 2

CITY OF GRANTS PASS
PARKS & COMMUNITY DEVELOPMENT DEPARTMENT

DEVELOPMENT CODE TEXT AMENDMENT
SELF-STORAGE & WAREHOUSE
ARTICLE 12 ~ ZONING DISTRICTS, ARTICLE 14 ~ CERTAIN USES,
& ARTICLE 30 ~ DEFINITIONS

FINDINGS OF FACT - URBAN AREA PLANNING COMMISSION

Procedure Type:	Type IV: Planning Commission Recommendation and City Council Decision
Project Number:	405-00006-15
Project Type:	Development Code Text Amendment
Applicant:	City of Grants Pass
Planner Assigned:	Joe Slaughter
Application Received:	December 30, 2015
Application Complete:	January 8, 2016
Date of Staff Report:	February 16, 2016
Date of UAPC Hearing:	February 24, 2016
Date of 2nd UAPC Hearing:	March 23, 2016
Date of Findings of Fact	March 23, 2016

I. PROPOSAL:

A Development Code Text Amendment adding definitions for Self-Storage and Warehouse to Article 30; listing where Self-Storage and Warehouse facilities are permitted in Article 12, Schedule 12-2; and creating standards for Self-Storage facilities in general commercial and residential zones in Article 14.

II. AUTHORITY AND CRITERIA:

Section 4.102 of the City of Grants Pass Development Code provides that the Director, Planning Commission or City Council may initiate a text amendment. The amendment has been initiated by the Director.

Section 2.062 authorizes the Planning Commission to make a recommendation to the City Council and authorize the City Council to make a final decision on an application for a Development Code Text Amendment, pursuant to the requirements of a Type IV procedure.

The text of the Development Code may be recommended for amendment and amended provided the criteria in Section 4.103 of the Development Code are met.

III. APPEAL PROCEDURE:

The City Council's final decision may be appealed to the State Land Use Board of Appeals (LUBA) as provided in state statutes. A notice of intent to appeal must be filed with LUBA within 21 days of the Council's written decision.

IV. PROCEDURE:

A. The application was received on December 30, 2015 and deemed complete on January 8, 2016. The application was processed in accordance with Section 2.060 of the Development Code.

B. Notice of the proposed amendment and the public hearings was sent to the Oregon Department of Land Conservation and Development on January 10, 2016 in accordance with ORS 197.610 and OAR Chapter 660, Division 18.

C. Notice of the proposed amendment and the public hearings was sent to Josephine County on January 10, 2016 in accordance with the 1998 Intergovernmental Agreement.

D. Public notice of the February 24, 2016 public hearing was published in the newspaper on February 17, 2016 in accordance with Sections 2.053 and 2.063 of the Development Code.

E. The Planning Commission held a public hearing on February 24, 2016 to consider the proposal. The Planning Commission continued this matter the March 23, 2016 meeting and made their recommendation to the City Council at that meeting.

V. SUMMARY OF EVIDENCE:

A. The basic facts and criteria regarding this application are contained in the staff report and its exhibits attached as Exhibit "A" and incorporated herein.

B. The minutes of the public hearing held by the Urban Area Planning Commission on February 24, 2016, which are attached as Exhibit "B", summarize the oral testimony presented and are hereby adopted and incorporated herein.

C. The PowerPoint presentation provided by staff at the February 24, 2015 public hearing is attached as Exhibit "C" and incorporated herein

VI. GENERAL FINDINGS - BACKGROUND AND DISCUSSION:

Currently, there is no definition for either Self-Storage or Warehouse facilities in the Development Code. Because the two uses are not defined separately they are grouped into the larger category of 'Industrial, Indoor' uses for the purpose of determining where and how they can be developed. Since 'Industrial, Indoor' uses are only permitted in the Business Park (BP), Industrial Park (IP), and Industrial (I) zones, Self-Storage facilities have been forced into the industrial zones. Self-Storage and Warehouse facilities are two distinctly different uses and by defining them separately the City will have the ability to allow them to be more appropriately located.

The proposed text amendments will allow Warehouse facilities to continue to be permitted in the same zones they are currently; BP, IP, & I. Self-Storage facilities will be permitted as a primary use in BP and IP zones. In an effort to help preserve industrial lands for employment uses, Self-Storage facilitates will no-longer be permitted in I zones. They will however, be permitted as a

secondary use in General Commercial (GC-1 & GC-2) and all residential zones, provided they meet certain criteria. Those criteria have been drafted as a part of the proposed text amendment in order to help mitigate any negative effects storage facilities could have in these commercial and residential zones.

VII. FINDINGS IN CONFORMANCE WITH APPLICABLE CRITERIA:

The text of the Development Code may be recommended for amendment and amended provided that all of the following criteria of Section 4.103 of the Development Code are met.

CRITERION 1: The proposed amendment is consistent with the purpose of the subject section and article.

Planning Commission Response: Satisfied. Schedule 12-2 lists uses, identifies in which zones those uses are permitted, and identifies the proper procedure type for a particular use in a particular zone. The purpose of the table is to site uses in appropriate zones, require adequate review process for uses, and to establish additional mitigation for certain uses in certain zones. The proposed text amendments are consistent with these purposes. By treating Self-Storage and Warehouse as two distinct uses, the City will have a greater ability to appropriately locate these facilities. The proposed amendments also establish adequate review processes and appropriate site development standards.

Warehouse facilities will continue to be permitted in the same zones they are currently; BP, IP, & I. Self-Storage facilities will be permitted as a primary use in BP and IP zones. In an effort to help preserve industrial lands for employment uses, Self-Storage facilitates will no-longer be permitted in I zones. They will however, be permitted as a secondary use in General Commercial (GC-1 & GC-2) and all residential zones, provided they meet certain criteria. Those criteria have been drafted as a part of the proposed text amendment in order to help mitigate any negative effects storage facilities could have in these commercial and residential zones.

CRITERION 2: The proposed amendment is consistent with other provisions of this code.

Planning Commission Response: Satisfied. Currently, there is no definition for either Self-Storage or Warehouse facilities in the Development Code. Because the two uses are not defined separately they are grouped into the larger category of 'Industrial, Indoor' uses for the purpose of determining where and how they can be developed. Self-Storage and Warehouse facilities are two distinctly different uses and by defining them separately the City will have the ability to allow them to be more appropriately located. This differentiation between clearly different uses is consistent with other provisions of this code. The proposed development standards for Self-Storage facilities in general commercial and residential zones are also consistent with other strategies used in this code to help mitigate negative effects certain uses could have in what could otherwise be viewed as incompatible zones.

CRITERION 3: The proposed amendment is consistent with the goals and policies of the Comprehensive Plan, and most effectively carries out those goals and policies of all alternatives considered.

Planning Commission Response: Satisfied. The proposed changes are consistent with Element 13–Land Use, of the Comprehensive Plan. Once Self-Storage and Warehouse are defined as two different uses Warehouse facilities will continue to be located in all industrial zones (BP,IP & I) while Self-Storage facilities will no-longer be permitted in I zones. This will

help to preserve prime industrial land for employment uses. The proposed changes will also add flexibility in the siting of Self-Storage facilities by allowing them to be developed in general commercial and residential zones. This will allow for these kinds of storage facilities to be more conveniently located for the mostly residential customers who use them. Because Self-Storage facilities could present negative effects in general commercial and residential zones without special consideration, the proposed text amendments include specific siting criteria for these facilities in general commercial and residential zones.

Most Effective Alternative

The alternative to approving the proposal is to make no change. Self-Storage and Warehouse facilities can continue to be reviewed as 'Industrial, Indoor' facilities. If the code is left unchanged it will continue to function as it does currently and more prime industrial land will be used for mini-storage facilities rather than employment generation. While the proposed text amendment is not necessarily critical, it is the most effective way to differentiate between these two uses and to site them more appropriately.

CRITERION 4: The proposed amendment is consistent with the functions, capacities, and performance standards of transportation facilities identified in the Master Transportation Plan.

Planning Commission Response: Satisfied. The proposed amendment is not expected to affect the functions, capacities, or performance standards of transportation facilities identified in the Master Transportation Plan (MTP).

VIII. RECOMMENDATION:

The UAPC found the applicable criteria satisfied and recommended the proposed amendments to Article 14, Article 12 – Schedule 12-2, and Article 30 noted in the staff's presentation be forwarded to the City Council for adoption.

IX. FINDINGS APPROVED BY THE URBAN AREA PLANNING COMMISSION this 23rd day of March, 2016.

Gerard Fitzgerald, Chair

Exhibit 2A

CITY OF GRANTS PASS
PARKS & COMMUNITY DEVELOPMENT DEPARTMENT

DEVELOPMENT CODE TEXT AMENDMENT
SELF-STORAGE & WAREHOUSE
ARTICLE 12 ~ ZONING DISTRICTS, ARTICLE 14 ~ CERTAIN USES,
& ARTICLE 30 ~ DEFINITIONS

SUPPLEMENTAL STAFF REPORT - URBAN AREA PLANNING COMMISSION

Procedure Type:	Type IV: Planning Commission Recommendation and City Council Decision
Project Number:	405-00006-15
Project Type:	Development Code Text Amendment
Applicant:	City of Grants Pass
Planner Assigned:	Joe Slaughter
Application Received:	December 30, 2015
Application Complete:	January 8, 2016
Date of Supplemental Staff Report:	March 15, 2016
Date of UAPC Hearing:	March 23, 2016

I. BACKGROUND:

The Urban Area Planning Commission (UAPC) considered the proposed Development Code Text Amendment adding definitions for Self-Storage and Warehouse to Article 30; listing where Self-Storage and Warehouse facilities are permitted in Article 12, Schedule 12-2; and creating standards for Self-Storage facilities in general commercial and residential zones in Article 14, at their February 24, 2016 meeting. At that meeting the staff report was presented, a public hearing was conducted, and the UAPC discussed the proposed amendments and directed staff to return to the March 23, 2016 meeting of the UAPC ready to discuss how the proposed text amendment could help to address the need for storage in existing residential neighborhoods.

II. DISCUSSION:

As stated in the original staff report, the intent of the proposed text amendment is to allow differentiation in the development review for, and the locating of, Self-Storage and Warehouse facilities. Once Self-Storage and Warehouse are defined as two different uses Warehouse facilities will continue to be located in all industrial zones (BP,IP & I) while Self-Storage facilities will no-longer be permitted in I zones. This will help to preserve prime industrial land for employment uses. The proposed changes will also add flexibility in the siting of Self-Storage facilities by allowing them to be developed in general commercial and residential zones. This will allow for these kinds of storage facilities to be more conveniently located for the mostly residential customers who use them. Because Self-Storage facilities could present negative effects in general commercial and residential zones without special consideration, the proposed text amendments include specific siting criteria for these facilities in general commercial and residential zones.

The concern presented by the UAPC at the February 24, 2016 meeting centered on the applicability of the proposed text amendment for existing residential neighborhoods. Since the

proposed text amendment was meant to provide an opportunity for Self-Storage facilities in residential neighborhoods, while at the same time trying to mitigate the negative effects commercial storage could have in residential neighborhoods, certain restrictions were put in place to limit how these Self-Storage facilities could be operated in residential zones. While it is true that these provisions of the code could most likely be addressed more easily in new residential developments and multi-family residential complexes, the code does not preclude the development of Self-Storage facilities in existing residential neighborhoods. Since the previous meeting, staff has revised the proposed text amendment, adding "for example:" prior to the list of residential types in Section 14.720 to make more clear that the list is not all inclusive, and that other types of residential developments (not listed) could also use these provisions.

Staff believes this approach to be a reasonable approach to allowing Self-Storage facilities in residential zones without opening residential zones to unrestricted commercial storage.

III. RECOMMENDATION:

Staff recommends the Planning Commission RECOMMEND APPROVAL of the proposed amendments to City Council, as presented in Exhibit 1. The draft finding, supporting this recommendation, are included in the February 24, 2016 UAPC Staff Report for this item.

IV. PLANNING COMMISSION ACTION:

A. Positive Action: Recommend approval of the request:

1. as submitted.
2. as modified by the Planning Commission with the following revisions (list):

B. Negative Action: Recommend denial of the request for the following reasons (list):

C. Postponement: Continue item

1. indefinitely.
2. to a time certain.

NOTE: This is a legislative decision. State law does ***not*** require that a decision be made on the application within 120 days.

V. INDEX TO EXHIBITS:

1. Mark up text for:
   - Schedule 12-2
   - Sections 14.700-14.720 (bold "for example:" in two places and the removal of "etc." at the end of those same lists are the only new text changes from the previous version presented in the Staff Report for the February 24, 2016 UAPC meeting)
   - Section 30.020

Article 12: Zoning Districts

****

Schedule 12-2. Permitted Uses and Site Plan Review Procedures																	
	Zoning Districts																
	RESIDENTIAL								COMMERCIAL					INDUSTRIAL		
	LR	MR		HR		HRR			COMMERCIAL					EMPLOYMENT		
Land Use Types	R-1-12 R-1-10 R-1-8	R-1-6	R-2	R-3 (R-3-1)	R-3-2 (p)	R-4 (R-4-1)	R-4-2 (l)(p)	R-5 (l)(p)	NC	GC (GC-1)	GC-2 (m)(p)	CBD	OR (n)	BP	IP	I (c)

****

4) Services																
a) Professional Office	PUD (k)	PUD (k)	PUD (k)	PUD (k)	PUD (k)	P-II	S-II	S-II	-	P-(a)	P-(a)	P-(a)	P-(a)	P-(b)	P-(b) (q)	-
b) Business Office	PUD (k)	PUD (k)	PUD (k)	PUD (k)	PUD (k)	PUD (k)	PUD (k)	PUD (k)	-	P-(a)	P-(a)	P-(a)	P-(a)	P-(b)	-	-
c) Limited Office	P-II	P-II	P-II	P-II	P-II	P-II	S-II	S-II	-	-	-	-	-	-	-	-
d) Repair, Maintenance, Commercial	-	-	-	-	-	-	-	-	-	P-(a)	P-(a)	P-(a)	-	P-(b)	-	P-(b)
e) Auto Service Station	-	-	-	-	-	-	-	-	-	P-(a)	P-(a)	-	-	P-(b)	-	-
f) Commercial Eating/Drinking Establishment	PUD (k)	PUD (k)	PUD (k)	PUD (k)	PUD (k)	PUD (k)	PUD (k)	PUD (k)	P-(a)	P-(a)	P-(a)	P-(a)	-	P-(b)	-	-
g) Hotel/Motel	-	-	-	-	-	-	-	-	-	P-(a)	P-(a)	P-(a)	-	-	-	-
h) RV Parks	-	-	-	-	-	-	-	-	-	P-III	P-III	-	-	-	-	-
i) Day Care/Family, per 14.310	S-I-A	S-I-A	S-I-A	S-I-A	S-I-A	S-I-A	S-I-A	S-I-A	S-I-A (g)(o)	S-I-A	S-I-A	S-I-A	PUD	S-I-A (g)	S-I-A (g)	S-I-A (g)
j) Day Care/Group, per 14.320	P-II	P-II	P-II	P-II	P-II	P-II	P-II	P-II	-	P-II	P-II	P-II	-	P-II	-	-
k) Group Care	PUD (k)	PUD (k)	PUD (k)	P-III	P-III	P-III	P-III	P-III	-	P-(a)	P-(a)	P-(a)	-	-	-	-
l) Hospitals	-	-	-	-	-	P-III	S-III	S-III	-	P-III	P-III	-	-	-	-	-
m) Vet. Clinics	-	-	-	-	-	-	-	-	-	P-(a)	P-(a)	-	-	P-(b)	-	-
n) Commercial Accessory -Building -Use	- -	- -	- -	- -	- -	- -	- -	- -	S-(h) S-EX	S-(h) S-EX	S-(h) S-EX	S-(h) S-EX	S-(h) S-EX	S-(h) S-EX	- -	- -
o) Bed & Breakfast, per 14.420	P-III	P-III	P-III	P-III	P-III	P-II	S-II	S-II	-	P-(a)	P-(a)	P-(a)	-	-	-	-
p) Voluntary Parking -Local Impact -Area Impact	- -	- -	P-II P-III	P-II P-III	P-II P-III	P-II P-III	- -	- -	- -	- -	- -	- -	- -	- -	- -	- -
q) Personal Service	PUD (k)	PUD (k)	PUD (k)	PUD (k)	PUD (k)	P-II	S-II	S-II	P-(a)	P-(a)	P-(a)	P-(a)	P-(a)	P-(b)	-	-
r) Self-Storage	S-(a)(s)	S-(a)(s)	S-(a)(s)	S-(a)(s)	S-(a)(s)	S-(a)(s)	S-(a)(s)	S-(a)(s)		S-(a)(r)	S-(a)(r)			P-(a)	P-(a)	
~~r~~s) Social Services Facility	-	-	-	-	-	-	-	-	-	-	-	-	-	P-III	-	P-III

****

7) Industrial																
a) Repair Maintenance, Industrial	-	-	-	-	-	-	-	-	-	-	-	-	-	P-(b)	-	P-(b)
b) Indoor	-	-	-	-	-	-	-	-	-	-	-	-	-	P-(b)	P-(b)	P-(b)
c) Outdoor	-	-	-	-	-	-	-	-	-	-	-	-	-	-	-	P-(b)
d) Prohibited	-	-	-	-	-	-	-	-	-	-	-	-	-	X	X	X
e) Industrial Accessory -Building -Use	 - -	 - -	 - -	 - -	 - -	 - -	 - -	 - -	 - -	 - -	 - -	 - -	 - -	 S-(h) S-I-EX	 S-(h) S-I-EX	 S-(h) S-I-EX
f) Outdoor Storage	-	-	-	-	-	-	-	-	-	-	-	-	-	P-II	-	P-II
g) Warehouse														P-(b)	P-(b)	P-(b)

****

Table Legend:

P = Permitted Use
S = Secondary Use. Secondary uses are allowed as a permitted use, but only when provided in conjunction with permitted uses as specified in Section ~~XX~~12.028(2)
- = Use Not Permitted
X = Use Specifically Prohibited (Uses defined in Article 30 as "Industrial, Prohibited")
C = Use Conditionally Permitted (See Article 16)
PUD = Planned Unit Development

I-EX = Type I Procedure, Exempt from Development Permit Review, Section 2.033
I-AU = Type I Procedure, Administrative Use Permit Review Only, Section 2.034
I-A= Type I Procedure, Building Permit Serves as Development Permit, Section 2.035
I-B= Type I Procedure, Director's Decision without Comment Period, Section 2.036
I-C= Type I Procedure, Director's Decision with Comment Period, Section 2.037
II = Type II Procedure, Hearings Officer's Decision, Section 2.040
III = Type III Procedure, Planning Commission's Decision, Section 2.050
IV-A = Type IV Procedure, City Council Decision without Planning Commission Recommendation, Section 2.060
IV-B = Type IV Procedure, City Council Decision with Planning Commission Recommendation, Section 2.060
V = Type V Procedure, Joint Board of County Commissioners & City Council Decision with Planning Commission Recommendation, Section 2.070

Table Notes:

(a) A Type II Procedure is required if the subject property adjoins a residential zone, otherwise a Type I-C Procedure is required.

(b) A Type II Procedure is required if the subject property adjoins a residential or commercial zone, otherwise Type I-C Procedure is required.

(c) If within the Spalding Regionally Significant Industrial Area (RSIA) Overlay, an applicant can request an Expedited Industrial Site Plan Review procedure; otherwise procedures within Schedule 12-2 apply.

(d) Type I-A, except the following are exempt (Type I-EX): operation, maintenance, repair, and preservation of existing transportation facilities; dedication or public acquisition of rights-of-way and easements; authorization of construction and construction of facilities and improvements, where the improvements are within the existing right-of-way or easement area or are consistent with clear and objective dimensional standards; and emergency measures necessary for the safety and protection of property.

(e) Manufactured Dwelling Parks are not permitted in commercial or industrial zones or commercial or industrial Comprehensive Plan land use districts. Siting of an individual home within an approved manufactured dwelling park requires a Type I-A procedure.

(f) An existing residential dwelling unit is a permitted use in this zone. In zones where a new residential dwelling unit is not a permitted use, this provision allows the existing residential dwelling unit to continue or expand without being subject to the nonconforming <u>use</u> provisions of the Development Code. There may be nonconforming <u>development</u> provisions that are applicable. If an existing dwelling unit is removed in a zone where a new dwelling unit is not permitted, it shall not be replaced.

In zones where a new residential dwelling unit is not a permitted use, this provision does not allow for expansion that increases the number of dwelling units.

(g) In zones where a new residential dwelling unit is not a permitted use, this provision allows for this use associated with the existing residential dwelling as authorized in Article 14.

(h) A commercial or industrial accessory building of 400 square feet or less that comprises less than 25 percent of the existing floor area of buildings and meets the definition of a minor modification in Section 19.058 of this Code is reviewed through a Type I-A procedure. All other commercial or industrial accessory buildings are subject to the applicable site plan review procedures.

A watchman's cottage is permitted as a new residential dwelling unit if it serves a direct industrial function. (12.341)

(i) A Type I-A Procedure is required for water and sewer pump stations. All other minor public facilities are reviewed through the procedure specified in table.

(j) A Type III Procedure is required if the tower height exceeds the zone height limit, otherwise a Type II Procedure is required.

(k) Trade and service uses permitted through a PUD in residential zones are subject to the limitations in Article 18.

(l) In the R-4-2 and R-5 zones, office uses are Secondary Uses, See Section 12.050

(m) In the GC-2 zone, residential uses are Secondary Uses, See Section 12.050

(n) In the OR zone, residential uses are Secondary Uses, See Section 12.050

(o) In the NC zone, upper-story residential uses are Secondary Uses, See Section 12.050

(p) In addition to the uses listed in Schedule 12-2, the following shall be permitted as primary uses rather than only as secondary uses or as part of a PUD in the specified zone, subject to all applicable provisions of this Code:

1. **R-3-2 zone.**

a. One single-family detached dwelling on an existing lot of record, and permitted accessory uses, including an accessory dwelling unit, meeting the requirements of this section.
b. The existing lot of record shall be existing on or before November 12, 2014, or shall be a lot or parcel that was part of an approved land division application which was submitted on or before November 12, 2014.
c. This shall include replacement of an existing single-family detached dwelling on a lot of record meeting the requirements of this section.

2. **R-4-2 and R-5 zones.**
   a. One single-family detached dwelling on an existing lot of record, and permitted accessory uses, including an accessory dwelling unit, meeting the requirements of this section.
   b. One duplex, two detached single-family dwellings, or division of a lot of record described below to include two attached units (with one common zero-lot line), subject to all applicable building code, utility, and Development Code requirements.
   c. The existing lot of record shall be existing on or before November 12, 2014, or shall be a lot or parcel that was part of an approved land division application which was submitted on or before November 12, 2014 which has not expired.
   d. This shall include replacement of an existing dwelling on a lot of record meeting the requirements of this section.

3. **GC-2 zone.**
   a. One single-family detached dwelling on an existing lot of record, and permitted accessory uses, including an accessory dwelling unit, meeting the requirements of this section.
   b. The existing lot of record shall be existing on or before November 12, 2014, or shall be a lot or parcel that was part of an approved land division application which was submitted on or before November 12, 2014.
   c. This shall include replacement of an existing single-family detached dwelling on a lot of record meeting the requirements of this section.

(q) Professional Office use permitted in the Industrial Park District only when subject property is located within the Medical Overlay District.

(r) Self-Storage in General Commercial zones shall meet the standards in Section 14.710

(s) Self-Storage in Residential zones shall meet the standards in Section 14.720

****

Article 14: Certain Uses

****

14.700 Self-Storage in General Commercial and Residential Zones

The review procedure for Self-Storage shall be as provided in Schedule 12-2

14.710 Development Standards for Self-Storage in General Commercial Zones

(1) An approved primary use or uses must exist on the same property between the Self-Storage and all street frontages.

(2) The approved primary use(s) must be in a building or buildings totaling at least 2,500 square feet in area.

(3) The building(s) containing the approved primary use(s) shall be oriented to obscure view of the Self-Storage from all rights-of-way to the greatest extent practical.

(4) All buildings containing the approved primary uses(s) must meet the Architectural Standards in Section 20.400-20.495.

(5) The development of the site must meet Article 23 Landscaping and Buffering Development Standards.

(6) The development must meet all other applicable provisions of this Code.

14.720 Development Standards for Self-Storage in Residential Zones

(1) Self-Storage in residential zones shall only be made available for use by residents of the residential development (**for example:** multi-family complex, residential subdivision, PUD) containing the Self-Storage facility. At no time is the Self-Storage facility permitted to serve non-residents.

(2) Self-Storage in residential zones shall be maintained and operated by the owner of the complex in the case of multi-family developments held in common ownership, and by a legally formed homeowners association in the case of residential developments held in separate ownership (**for example:** residential subdivision, PUD, condominium).

(3) The Self-Storage buildings shall be built in a location and manner that obscures their view from all rights-of-way and paths to the greatest extent practical.

(4) The development of the site must meet Article 23 Landscaping and Buffering Development Standards. The Self-Storage facility must meet the Commercial standards for Landscape and Buffering.

(5) The development must meet all other applicable provisions of this Code.

Article 30: Definitions

****

30.020 Definitions

****

School: Facilities for the instruction of children, youth and adults. School uses are of two types:

(1) Public: Public, private or parochial, kindergarten, primary, secondary and high schools and colleges, including accessory administrative uses, but not child care facilities, except when operated in conjunction with a school.

(2) Technical: Technical, business, trade, dancing, music or sports schools, including accessory administrative uses.

Self-Storage: A commercial facility in which customers can rent space to store possessions.

Service Station: An establishment selling fuel and oil for vehicles; selling, servicing and installing tires, batteries, accessories and related products; furnishing minor repair and service when conducted entirely within an enclosed building, and at which incidental services are conducted. "Minor repair and service," as used in this definition, shall be understood to exclude activities such as painting, bodywork, steam cleaning, and/or tire recapping.

****

Visual Obstruction: Any fence, hedge, tree, shrub, device, wall or structure between the elevations of 2 1/2 feet and 8 feet above the adjacent curb height or above the elevation of gutter line of street edge where there is no curb, as determined by the City Engineer, and so
located at a street, drive, or alley intersection as to limit the visibility of pedestrians or persons in motor vehicles on said streets, drives, or alleys.

Warehouse: A large building for storing items before they are sold, used, or sent out to retail shops.

Watchman's Cottage: See "Residential Uses in Industrial Zones."

****

Exhibit 2C

Self-Storage and Warehouse Text Amendment

Lora Glover, Director
Parks and Community Development
March 23, 2016

Subject

- A Development Code Text Amendment
  - Adding definitions for Self-Storage and Warehouse to Article 30;
  - Listing where Self-Storage and Warehouse facilities are permitted in Article 12, Schedule 12-2; and
  - Creating standards for Self-Storage facilities in general commercial and residential zones.

Background

- Discussed at February 24, 2016 UAPC meeting
- Staff was asked to return with alternatives that would make it possible to develop self-storage in existing residential neighborhoods
- The amendment as presented would allow for the development of self-storage in existing residential neighborhoods
- Small changes to proposed amendment to make this more clear

Background

- Developing self-storage in multi-family developments and in new residential subdivisions likely easier than developing self storage in existing subdivision, but it is possible with the proposed amendment
- Self-storage in residential intentionally made restrictive in order to help mitigate negative impacts of self-storage in residential neighborhoods/developments
- Without these controls self-storage would not be a compatible use in residential zones

Proposed Text Re: Self-Storage in Residential

14.720 Development Standards for Self-Storage in Residential Zones

- Self-Storage in residential zones shall only be made available for use by residents of the residential development (**for example:** multi-family complex, residential subdivision, PUD) containing the Self-Storage facility. At no time is the Self-Storage facility permitted to serve non-residents.
- Self-Storage in residential zones shall be maintained and operated by the owner of the complex in the case of multi-family developments held in common ownership, and by a legally formed homeowners association in the case of residential developments held in separate ownership (**for example:** residential subdivision, PUD, condominium).
- The Self-Storage buildings shall be built in a location and manner that obscures their view from all rights-of-way and paths to the greatest extent practical.
- The development of the site must meet Article 23 Landscaping and Buffering Development Standards. The Self-Storage facility must meet the Commercial standards for Landscape and Buffering.
- The development must meet all other applicable provisions of this Code.

Effect of proposed amendment

- Cause these two distinctly different uses to be reviewed separately
- Protect industrial land for employment uses
- Provide flexibility for mini-storage and allow them to be sited closer to the people who use them

Call to Action

- Call to Action Date: This application is not subject to the 120-day deadline.

- Alternatives
  - Recommend Council approve the text amendment as presented in the Staff report;
  - Recommend Council approve the text amendment as modified by the UAPC (list);
  - Recommend Council deny the text amendment for the following reasons (list);
  - Postpone the item indefinitely; or
  - Postpone the item to a time certain.

Exhibit 2D

CITY OF GRANTS PASS
PARKS & COMMUNITY DEVELOPMENT DEPARTMENT

DEVELOPMENT CODE TEXT AMENDMENT
SELF-STORAGE & WAREHOUSE
ARTICLE 12 ~ ZONING DISTRICTS, ARTICLE 14 ~ CERTAIN USES,
& ARTICLE 30 ~ DEFINITIONS

STAFF REPORT - URBAN AREA PLANNING COMMISSION

Procedure Type:	Type IV: Planning Commission Recommendation and City Council Decision
Project Number:	405-00006-15
Project Type:	Development Code Text Amendment
Applicant:	City of Grants Pass
Planner Assigned:	Joe Slaughter
Application Received:	December 30, 2015
Application Complete:	January 8, 2016
Date of Staff Report:	February 16, 2016
Date of UAPC Hearing:	February 24, 2016

I. PROPOSAL:

A Development Code Text Amendment adding definitions for Self-Storage and Warehouse to Article 30; listing where Self-Storage and Warehouse facilities are permitted in Article 12, Schedule 12-2; and creating standards for Self-Storage facilities in general commercial and residential zones in Article 14 ***(See Exhibit 1).***

II. AUTHORITY AND CRITERIA:

Section 4.102 of the City of Grants Pass Development Code provides that the Director, Planning Commission or City Council may initiate a text amendment. The amendment has been initiated by the Director.

Section 2.062 authorizes the Planning Commission to make a recommendation to the City Council and authorize the City Council to make a final decision on an application for a Development Code Text Amendment, pursuant to the requirements of a Type IV procedure.

The text of the Development Code may be recommended for amendment and amended provided the criteria in Section 4.103 of the Development Code are met.

III. APPEAL PROCEDURE:

The City Council's final decision may be appealed to the State Land Use Board of Appeals (LUBA) as provided in state statutes. A notice of intent to appeal must be filed with LUBA within 21 days of the Council's written decision.

IV. BACKGROUND AND DISCUSSION:

Currently, there is no definition for either Self-Storage or Warehouse facilities in the Development Code. Because the two uses are not defined separately they are grouped into the larger category of 'Industrial, Indoor' uses for the purpose of determining where and how they can be developed. Since 'Industrial, Indoor' uses are only permitted in the Business Park (BP), Industrial Park (IP), and Industrial (I) zones, Self-Storage facilities have been forced into the industrial zones. Self-Storage and Warehouse facilities are two distinctly different uses and by defining them separately the City will have the ability to allow them to be more appropriately located.

The proposed text amendments will allow Warehouse facilities to continue to be permitted in the same zones they are currently; BP, IP, & I. Self-Storage facilities will be permitted as a primary use in BP and IP zones. In an effort to help preserve industrial lands for employment uses, Self-Storage facilitates will no-longer be permitted in I zones. They will however, be permitted as a secondary use in General Commercial (GC-1 & GC-2) and all residential zones, provided they meet certain criteria. Those criteria have been drafted as a part of the proposed text amendment in order to help mitigate any negative effects storage facilities could have in these commercial and residential zones.

V. CONFORMANCE WITH APPLICABLE CRITERIA:

The text of the Development Code may be recommended for amendment and amended provided that all of the following criteria of Section 4.103 of the Development Code are met.

CRITERION 1: The proposed amendment is consistent with the purpose of the subject section and article.

Staff Response: Satisfied. Schedule 12-2 lists uses, identifies in which zones those uses are permitted, and identifies the proper procedure type for a particular use in a particular zone. The purpose of the table is to site uses in appropriate zones, require adequate review process for uses, and to establish additional mitigation for certain uses in certain zones. The proposed text amendments are consistent with these purposes. By treating Self-Storage and Warehouse as two distinct uses, the City will have a greater ability to appropriately locate these facilities. The proposed amendments also establish adequate review processes and appropriate site development standards.

Warehouse facilities will continue to be permitted in the same zones they are currently; BP, IP, & I. Self-Storage facilities will be permitted as a primary use in BP and IP zones. In an effort to help preserve industrial lands for employment uses, Self-Storage facilitates will no-longer be permitted in I zones. They will however, be permitted as a secondary use in General Commercial (GC-1 & GC-2) and all residential zones, provided they meet certain criteria. Those criteria have been drafted as a part of the proposed text amendment in order to help mitigate any negative effects storage facilities could have in these commercial and residential zones.

.

CRITERION 2: The proposed amendment is consistent with other provisions of this code.

Staff Response: Satisfied. Currently, there is no definition for either Self-Storage or Warehouse facilities in the Development Code. Because the two uses are not defined separately they are grouped into the larger category of 'Industrial, Indoor' uses for the purpose of determining where and how they can be developed. Self-Storage and Warehouse facilities

are two distinctly different uses and by defining them separately the City will have the ability to allow them to be more appropriately located. This differentiation between clearly different uses is consistent with other provisions of this code. The proposed development standards for Self-Storage facilities in general commercial and residential zones are also consistent with other strategies used in this code to help mitigate negative effects certain uses could have in what could otherwise be viewed as incompatible zones.

CRITERION 3: The proposed amendment is consistent with the goals and policies of the Comprehensive Plan, and most effectively carries out those goals and policies of all alternatives considered.

Staff Response: Satisfied. The proposed changes are consistent with Element 13–Land Use, of the Comprehensive Plan. Once Self-Storage and Warehouse are defined as two different uses Warehouse facilities will continue to be located in all industrial zones (BP,IP & I) while Self-Storage facilities will no-longer be permitted in I zones. This will help to preserve prime industrial land for employment uses. The proposed changes will also add flexibility in the siting of Self-Storage facilities by allowing them to be developed in general commercial and residential zones. This will allow for these kinds of storage facilities to be more conveniently located for the mostly residential customers who use them. Because Self-Storage facilities could present negative effects in general commercial and residential zones without special consideration, the proposed text amendments include specific siting criteria for these facilities in general commercial and residential zones.

Most Effective Alternative

The alternative to approving the proposal is to make no change. Self-Storage and Warehouse facilities can continue to be reviewed as 'Industrial, Indoor' facilities. If the code is left unchanged it will continue to function as it does currently and more prime industrial land will be used for mini-storage facilities rather than employment generation. While the proposed text amendment is not necessarily critical, it is the most effective way to differentiate between these two uses and to site them more appropriately.

CRITERION 4: The proposed amendment is consistent with the functions, capacities, and performance standards of transportation facilities identified in the Master Transportation Plan.

Staff Response: Satisfied. The proposed amendment is not expected to affect the functions, capacities, or performance standards of transportation facilities identified in the Master Transportation Plan (MTP).

VI. RECOMMENDATION:

Staff recommends the Planning Commission RECOMMEND APPROVAL of the proposed amendments to City Council, as presented in Exhibit 1.

VII. PLANNING COMMISSION ACTION:

A. Positive Action: Recommend approval of the request:

1. as submitted.
2. as modified by the Planning Commission with the following revisions (list):

B. Negative Action: Recommend denial of the request for the following reasons (list):

C. Postponement: Continue item

1. indefinitely.
2. to a time certain.

NOTE: This is a legislative decision. State law does ***not*** require that a decision be made on the application within 120 days.

VIII. INDEX TO EXHIBITS:

1. Mark up text for:
   - Schedule 12-2
   - Sections 14.700-14.720 (all new text)
   - Section 30.020

Article 12: Zoning Districts

****

Schedule 12-2. Permitted Uses and Site Plan Review Procedures																	
	Zoning Districts																
	RESIDENTIAL								COMMERCIAL					INDUSTRIAL		
	LR	MR		HR		HRR			COMMERCIAL					EMPLOYMENT		
Land Use Types	R-1-12 R-1-10 R-1-8	R-1-6	R-2	R-3 (R-3-1)	R-3-2 (p)	R-4 (R-4-1)	R-4-2 (l)(p)	R-5 (l)(p)	NC	GC (GC-1)	GC-2 (m)(p)	CBD	OR (n)	BP	IP	I (c)

****

EXHIBIT 7

4) Services																
a) Professional Office	PUD (k)	PUD (k)	PUD (k)	PUD (k)	PUD (k)	P-II	S-II	S-II	-	P-(a)	P-(a)	P-(a)	P-(a)	P-(b)	P-(b) (q)	-
b) Business Office	PUD (k)	PUD (k)	PUD (k)	PUD (k)	PUD (k)	PUD (k)	PUD (k)	PUD (k)	-	P-(a)	P-(a)	P-(a)	P-(a)	P-(b)	-	-
c) Limited Office	P-II	P-II	P-II	P-II	P-II	P-II	S-II	S-II	-	-	-	-	-	-	-	-
d) Repair, Maintenance, Commercial	-	-	-	-	-	-	-	-	-	P-(a)	P-(a)	P-(a)	-	P-(b)	-	P-(b)
e) Auto Service Station	-	-	-	-	-	-	-	-	-	P-(a)	P-(a)	-	-	P-(b)	-	-
f) Commercial Eating/Drinking Establishment	PUD (k)	PUD (k)	PUD (k)	PUD (k)	PUD (k)	PUD (k)	PUD (k)	PUD (k)	P-(a)	P-(a)	P-(a)	P-(a)	-	P-(b)	-	-
g) Hotel/Motel	-	-	-	-	-	-	-	-	-	P-(a)	P-(a)	P-(a)	-	-	-	-
h) RV Parks	-	-	-	-	-	-	-	-	-	P-III	P-III	-	-	-	-	-
i) Day Care/Family, per 14.310	S-I-A	S-I-A	S-I-A	S-I-A	S-I-A	S-I-A	S-I-A	S-I-A	S-I-A (g)(o)	S-I-A	S-I-A	S-I-A	PUD	S-I-A (g)	S-I-A (g)	S-I-A (g)
j) Day Care/Group, per 14.320	P-II	P-II	P-II	P-II	P-II	P-II	P-II	P-II	-	P-II	P-II	P-II	-	P-II	-	-
k) Group Care	PUD (k)	PUD (k)	PUD (k)	P-III	P-III	P-III	P-III	P-III	-	P-(a)	P-(a)	P-(a)	-	-	-	-
l) Hospitals	-	-	-	-	-	P-III	S-III	S-III	-	P-III	P-III	-	-	-	-	-
m) Vet. Clinics	-	-	-	-	-	-	-	-	-	P-(a)	P-(a)	-	-	P-(b)	-	-
n) Commercial Accessory -Building -Use	 - -	 - -	 - -	 - -	 - -	 - -	 - -	 - -	 S-(h) S-EX	 S-(h) S-EX	 S-(h) S-EX	 S-(h) S-EX	 S-(h) S-EX	 S-(h) S-EX	 - -	 - -
o) Bed & Breakfast, per 14.420	P-III	P-III	P-III	P-III	P-III	P-II	S-II	S-II	-	P-(a)	P-(a)	P-(a)	-	-	-	-
p) Voluntary Parking -Local Impact -Area Impact	 - -	 - -	 P-II P-III	 P-II P-III	 P-II P-III	 P-II P-III	 - -	 - -	 - -	 - -	 - -	 - -	 - -	 - -	 - -	 - -
q) Personal Service	PUD (k)	PUD (k)	PUD (k)	PUD (k)	PUD (k)	P-II	S-II	S-II	P-(a)	P-(a)	P-(a)	P-(a)	P-(a)	P-(b)	-	-
r) Self-Storage	S-(a)(s)	S-(a)(s)	S-(a)(s)	S-(a)(s)	S-(a)(s)	S-(a)(s)	S-(a)(s)	S-(a)(s)		S-(a)(r)	S-(a)(r)			P-(a)	P-(a)	
~~r~~s) Social Services Facility	-	-	-	-	-	-	-	-	-	-	-	-	-	P-III	-	P-III

****

7) Industrial																
a) Repair Maintenance, Industrial	-	-	-	-	-	-	-	-	-	-	-	-	-	P-(b)	-	P-(b)
b) Indoor	-	-	-	-	-	-	-	-	-	-	-	-	-	P-(b)	P-(b)	P-(b)
c) Outdoor	-	-	-	-	-	-	-	-	-	-	-	-	-	-	-	P-(b)
d) Prohibited	-	-	-	-	-	-	-	-	-	-	-	-	-	X	X	X
e) Industrial Accessory -Building -Use	 - -	 - -	 - -	 - -	 - -	 - -	 - -	 - -	 - -	 - -	 - -	 - -	 - -	 S-(h) S-I-EX	 S-(h) S-I-EX	 S-(h) S-I-EX
f) Outdoor Storage	-	-	-	-	-	-	-	-	-	-	-	-	-	P-II	-	P-II
g) Warehouse														P-(b)	P-(b)	P-(b)

****

Table Legend:

P = Permitted Use
S = Secondary Use. Secondary uses are allowed as a permitted use, but only when provided in conjunction with permitted uses as specified in Section ~~XX~~12.028(2)
- = Use Not Permitted
X = Use Specifically Prohibited (Uses defined in Article 30 as "Industrial, Prohibited")
C = Use Conditionally Permitted (See Article 16)
PUD = Planned Unit Development

I-EX = Type I Procedure, Exempt from Development Permit Review, Section 2.033
I-AU = Type I Procedure, Administrative Use Permit Review Only, Section 2.034
I-A= Type I Procedure, Building Permit Serves as Development Permit, Section 2.035
I-B= Type I Procedure, Director's Decision without Comment Period, Section 2.036
I-C= Type I Procedure, Director's Decision with Comment Period, Section 2.037
II = Type II Procedure, Hearings Officer's Decision, Section 2.040
III = Type III Procedure, Planning Commission's Decision, Section 2.050
IV-A = Type IV Procedure, City Council Decision without Planning Commission Recommendation, Section 2.060
IV-B = Type IV Procedure, City Council Decision with Planning Commission Recommendation, Section 2.060
V = Type V Procedure, Joint Board of County Commissioners & City Council Decision with Planning Commission Recommendation, Section 2.070

Table Notes:

(a) A Type II Procedure is required if the subject property adjoins a residential zone, otherwise a Type I-C Procedure is required.

(b) A Type II Procedure is required if the subject property adjoins a residential or commercial zone, otherwise Type I-C Procedure is required.

(c) If within the Spalding Regionally Significant Industrial Area (RSIA) Overlay, an applicant can request an Expedited Industrial Site Plan Review procedure; otherwise procedures within Schedule 12-2 apply.

(d) Type I-A, except the following are exempt (Type I-EX): operation, maintenance, repair, and preservation of existing transportation facilities; dedication or public acquisition of rights-of-way and easements; authorization of construction and construction of facilities and improvements, where the improvements are within the existing right-of-way or easement area or are consistent with clear and objective dimensional standards; and emergency measures necessary for the safety and protection of property.

(e) Manufactured Dwelling Parks are not permitted in commercial or industrial zones or commercial or industrial Comprehensive Plan land use districts. Siting of an individual home within an approved manufactured dwelling park requires a Type I-A procedure.

(f) An existing residential dwelling unit is a permitted use in this zone. In zones where a new residential dwelling unit is not a permitted use, this provision allows the existing residential dwelling unit to continue or expand without being subject to the nonconforming <u>use</u> provisions of the Development Code. There may be nonconforming <u>development</u> provisions that are applicable. If an existing dwelling unit is removed in a zone where a new dwelling unit is not permitted, it shall not be replaced.

In zones where a new residential dwelling unit is not a permitted use, this provision does not allow for expansion that increases the number of dwelling units.

(g) In zones where a new residential dwelling unit is not a permitted use, this provision allows for this use associated with the existing residential dwelling as authorized in Article 14.

(h) A commercial or industrial accessory building of 400 square feet or less that comprises less than 25 percent of the existing floor area of buildings and meets the definition of a minor modification in Section 19.058 of this Code is reviewed through a Type I-A procedure. All other commercial or industrial accessory buildings are subject to the applicable site plan review procedures.

A watchman's cottage is permitted as a new residential dwelling unit if it serves a direct industrial function. (12.341)

(i) A Type I-A Procedure is required for water and sewer pump stations. All other minor public facilities are reviewed through the procedure specified in table.

(j) A Type III Procedure is required if the tower height exceeds the zone height limit, otherwise a Type II Procedure is required.

(k) Trade and service uses permitted through a PUD in residential zones are subject to the limitations in Article 18.

(l) In the R-4-2 and R-5 zones, office uses are Secondary Uses, See Section 12.050

(m) In the GC-2 zone, residential uses are Secondary Uses, See Section 12.050

(n) In the OR zone, residential uses are Secondary Uses, See Section 12.050

(o) In the NC zone, upper-story residential uses are Secondary Uses, See Section 12.050

(p) In addition to the uses listed in Schedule 12-2, the following shall be permitted as primary uses rather than only as secondary uses or as part of a PUD in the specified zone, subject to all applicable provisions of this Code:

1. **R-3-2 zone.**

a. One single-family detached dwelling on an existing lot of record, and permitted accessory uses, including an accessory dwelling unit, meeting the requirements of this section.
b. The existing lot of record shall be existing on or before November 12, 2014, or shall be a lot or parcel that was part of an approved land division application which was submitted on or before November 12, 2014.
c. This shall include replacement of an existing single-family detached dwelling on a lot of record meeting the requirements of this section.

2. **R-4-2 and R-5 zones.**
a. One single-family detached dwelling on an existing lot of record, and permitted accessory uses, including an accessory dwelling unit, meeting the requirements of this section.
b. One duplex, two detached single-family dwellings, or division of a lot of record described below to include two attached units (with one common zero-lot line), subject to all applicable building code, utility, and Development Code requirements.
c. The existing lot of record shall be existing on or before November 12, 2014, or shall be a lot or parcel that was part of an approved land division application which was submitted on or before November 12, 2014 which has not expired.
d. This shall include replacement of an existing dwelling on a lot of record meeting the requirements of this section.

3. **GC-2 zone.**
a. One single-family detached dwelling on an existing lot of record, and permitted accessory uses, including an accessory dwelling unit, meeting the requirements of this section.
b. The existing lot of record shall be existing on or before November 12, 2014, or shall be a lot or parcel that was part of an approved land division application which was submitted on or before November 12, 2014.
c. This shall include replacement of an existing single-family detached dwelling on a lot of record meeting the requirements of this section.

(q) Professional Office use permitted in the Industrial Park District only when subject property is located within the Medical Overlay District.

(r) Self-Storage in General Commercial zones shall meet the standards in Section 14.710

(s) Self-Storage in Residential zones shall meet the standards in Section 14.720

****

Article 14: Certain Uses

****

14.700 Self-Storage in General Commercial and Residential Zones

The review procedure for Self-Storage shall be as provided in Schedule 12-2

14.710 Development Standards for Self-Storage in General Commercial Zones

(1) An approved primary use or uses must exist on the same property between the Self-Storage and all street frontages.

(2) The approved primary use(s) must be in a building or buildings totaling at least 2,500 square feet in area.

(3) The building(s) containing the approved primary use(s) shall be oriented to obscure view of the Self-Storage from all rights-of-way to the greatest extent practical.

(4) All buildings containing the approved primary uses(s) must meet the Architectural Standards in Section 20.400-20.495.

(5) The development of the site must meet Article 23 Landscaping and Buffering Development Standards.

(6) The development must meet all other applicable provisions of this Code.

14.720 Development Standards for Self-Storage in Residential Zones

(1) Self-Storage in residential zones shall only be made available for use by residents of the residential development (multi-family complex, residential subdivision, PUD, etc.) containing the Self-Storage facility. At no time is the Self-Storage facility permitted to serve non-residents.

(2) Self-Storage in residential zones shall be maintained and operated by the owner of the complex in the case of multi-family developments held in common ownership, and by a legally formed homeowners association in the case of residential developments held in separate ownership (residential subdivision, PUD, condominium, etc.)

(3) The Self-Storage buildings shall be built in a location and manner that obscures their view from all rights-of-way and paths to the greatest extent practical.

(4) The development of the site must meet Article 23 Landscaping and Buffering Development Standards. The Self-Storage facility must meet the Commercial standards for Landscape and Buffering.

(5) The development must meet all other applicable provisions of this Code.

Article 30: Definitions

****

30.020 Definitions

****

School: Facilities for the instruction of children, youth and adults. School uses are of two types:

(1) Public: Public, private or parochial, kindergarten, primary, secondary and high schools and colleges, including accessory administrative uses, but not child care facilities, except when operated in conjunction with a school.

(2) Technical: Technical, business, trade, dancing, music or sports schools, including accessory administrative uses.

Self-Storage: A commercial facility in which customers can rent space to store possessions.

Service Station: An establishment selling fuel and oil for vehicles; selling, servicing and installing tires, batteries, accessories and related products; furnishing minor repair and service when conducted entirely within an enclosed building, and at which incidental services are conducted. "Minor repair and service," as used in this definition, shall be understood to exclude activities such as painting, bodywork, steam cleaning, and/or tire recapping.

****

Visual Obstruction: Any fence, hedge, tree, shrub, device, wall or structure between the elevations of 2 1/2 feet and 8 feet above the adjacent curb height or above the elevation of gutter line of street edge where there is no curb, as determined by the City Engineer, and so
located at a street, drive, or alley intersection as to limit the visibility of pedestrians or persons in motor vehicles on said streets, drives, or alleys.

Warehouse: A large building for storing items before they are sold, used, or sent out to retail shops.

Watchman's Cottage: See "Residential Uses in Industrial Zones."

****

Exhibit 2E

URBAN AREA PLANNING COMMISSION
MEETING MINUTES
February 24, 2016 – 6:00 P.M.
Court Yard Conference Room

1. **ROLL CALL:**

The Urban Area Planning Commission met in regular session on the above date with Chair Gerard Fitzgerald presiding. Vice Chair Jim Coulter and Commissioners Loree Arthur, David Kellenbeck, Blair McIntire, Dan McVay, and Robert Wiegand were present. Commissioner Lois MacMillan was absent. Also present and representing the City was Parks & Community Development (hereafter: PCD) Director Lora Glover and PCD Senior Planner Joe Slaughter. City Council Liaison Rick Riker was present as well.

2. **ITEMS FROM THE PUBLIC:** None.

3. **PUBLIC HEARINGS:**
   a. **405-00005-15: Development Code Text Amendment ~ Slope Hazard District Pg. 1-12**
      - Joe gave the staff report.
      - Commissioner McIntire asked if a development report was done every time a lot with a steep slope was sold, developed, etc. He clarified that his concern was if the area had sluff off because of significant flooding that could change the dynamics of that property. How often are the development reports done? How would you address that?
      - Joe let the Commission know that if a property was in the steep slope area and graded, it will still be in considered in the steep slope area. This would require developers to do erosion and sediment control and to meet the steep slope standards. By having a registered engineer sign off on the slope the liability shifts the where it belongs, on the developer rather than on the City.
      - Would a civil engineer be able to do a steep slope report or do you need a geotech? - Slopes between 15-25% would require a civil engineer. Any slopes over 25% would need a specialist.

- How long will the map take? – There is not currently a map nor a plan to make one. There have been areas that are listed as steep slope in the past but it's not complete which leaves gaps that could cause problems in the future. This text amendment will remove the reference to the map and leave the classification up to the engineer working on each area. The best information will always be available at the time of development.
- If the area that was potential slope hazard was in the common area and not going to be developed would you need a report? –Short answer, no, if you're not developing you do not need to do the report. However in the case of a PUD you would need to demonstrate that not developing the slope area would benefit the residents.
- It was expressed that under plans and reports, item 2B should also include rules for grading and erosion control for driveways.

MOTION/VOTE

Commissioner Coulter moved and Commissioner Kellenbeck seconded the motion to recommend the City Council approve the proposed Development Code Text Amendment – Slope Hazard District with the amendment to 13.121, item 2b and 13.130, item 2b to include driveways. The vote resulted as follows: "AYES": Chair Fitzgerald and Vice Chair Coulter and Commissioners Kellenbeck, McIntire, Arthur, and McVay. "NAYS": None. Abstain: None. Absent: MacMillan. The motion passed.

b. 405-00006-15: Development Code Text Amendment ~ Self Storage and Warehouse Pg. 13-24

- Joe gave the staff report.
- Commissioner Fitzgerald questioned what the possible fallouts to the urban growth boundary expansion numbers might be. Will the change reduce the available inventory of general commercial?
- Joe let the Commission know that it might affect it. One less use for industrial land might cause us to end up with a surplus of industrial land and allowing an additional use for general commercial might cause an undersupply of general commercial. This however can be corrected over time if the need arises for more general commercial land.

- It was brought up that Public Safety might want to comment on the possibility of increased crime due to the mini storage being blocked by the commercial frontage.
- Concerns were brought up about what can be done about the Core-Mark property.
- Commissioner Arthur brought up that some cities allow parking structures to be put up for neighborhood use for areas that do not have enough parking. She wanted the Development Code to reflect that as a possibility in the residential text amendment section of the code. The current changes appear to be worded to only be able to be used by apartment complexes and officially designated subdivisions. The commission agreed that the wording should be structured to not limit this to new development.

MOTION/VOTE

Commissioner Arthur moved and Commissioner Kellenbeck seconded the motion to set aside project number 405-00006-15 until staff could come back with suggestions on how to allow self-storage in existing residential neighborhoods until the next UAPC meeting on March 23, 2016. The vote resulted as follows: "AYES": Chair Fitzgerald and Vice Chair Coulter and Commissioners Kellenbeck, McIntire, Arthur, and McVay. "NAYS": None. Abstain: None. Absent: MacMillan. The motion passed.

4. **CONSENT AGENDA:**

   a. **MINUTES:** January 27, 2016

   b. **FINDINGS OF FACT:**

      i. 405-00005-15: Development Code Text Amendment ~ Slope Hazard District Pg. 29-32

      ii. 405-00006-15: Development Code Text Amendment ~ Self Storage and Warehouse Pg.33-36

MOTION/VOTE

Commissioner Coulter moved and Commissioner ~~David~~ Kellenbeck seconded the motion to approve the consent agenda which includes the minutes from January 27, 2016 and findings of fact for 405-00005-15 with modifications recommended by the UAPC and that 405-00006-15 be continued until March 23, 2016. The vote resulted as follows: "AYES": Chair Fitzgerald and Vice Chair Coulter and Commissioners Kellenbeck, McIntire, Arthur, and McVay. "NAYS": None. Abstain: Commissioner Arthur. Absent: MacMillan.

The motion passed.

5. **OTHER ITEMS/STAFF DISCUSSION:**
   - None.

6. **ITEMS FROM COMMISSIONERS:**
   - None.

7. **ADJOURNMENT:**

Chair Fitzgerald adjourned the meeting at 7:05 P.M.

Gerard Fitzgerald, Chair
Urban Area Planning Commission

3/23 2016
Date

These minutes were prepared by Carlie Paulsen, Administration Department, City of Grants Pass.

Exhibit 2F

Self-Storage and Warehouse Text Amendment

Joe Slaughter, Senior Planner
Parks and Community Development
February 24, 2016

Subject

- A Development Code Text Amendment
  - Adding definitions for Self-Storage and Warehouse to Article 30;
  - Listing where Self-Storage and Warehouse facilities are permitted in Article 12, Schedule 12-2; and
  - Creating standards for Self-Storage facilities in general commercial and residential zones.

Background

- No definition currently for Self-Storage or Warehouse
- All stand alone storage reviewed as "Industrial, Indoor"
- Permitted only in I, IP, & BP

Effect of proposed amendment

- Cause these two distinctly different uses to be reviewed separately
- Protect industrial land for employment uses
- Provide flexibility for mini-storage and allow them to be sited closer to the people who use them

Call to Action

- Call to Action Date: This application is not subject to the 120-day deadline.

- Alternatives
  - Recommend Council approve the text amendment as presented in the Staff report;
  - Recommend Council approve the text amendment as modified by the UAPC (list);
  - Recommend Council deny the text amendment for the following reasons (list);
  - Postpone the item indefinitely; or
  - Postpone the item to a time certain.

ORDINANCE NO.

AN ORDINANCE OF THE COUNCIL OF THE CITY OF GRANTS PASS AMENDING ARTICLE 12, SCHEDULE 12-2: LISTING WHERE SELF-STORAGE AND WAREHOUSE FACILITIES ARE PERMITTED; AMENDING ARTICLE 14: CREATING STANDARDS FOR SELF-STORAGE FACILITIES IN GENERAL COMMERCIAL AND RESIDENTIAL ZONES; AND AMENDING ARTICLE 30: CREATING DEFINITIONS FOR SELF-STORAGE AND WAREHOUSE.

WHEREAS:

1. The Grants Pass and Urbanizing Area Comprehensive Community Development Plan was adopted December 15, 1982; and
2. The ordinance amends Article 12, Schedule 12-2: listing where Self-Storage and Warehouse facilities are permitted; amends Article 14: creating standards for Self-Storage facilities in general commercial and residential zones; and amends Article 30: creating definitions for Self-Storage and Warehouse; and
3. The proposal is consistent with the goals and policies of the Comprehensive Plan; and
4. The applicable criteria from the Development Code are satisfied, and approval of the proposal is recommended by the Urban Area Planning Commission to the City Council.

NOW, THEREFORE, THE CITY OF GRANTS PASS HEREBY ORDAINS:

Section 1. The amendment to Article 12, Schedule 12-2: listing where Self-Storage and Warehouse facilities are permitted; the amendment to Article 14: creating standards for Self-Storage facilities in general commercial and residential zones; and the amendment to Article 30: creating definitions for Self-Storage and Warehouse; and as set forth in Exhibit "A" is hereby adopted.

ADOPTED by the Council of the City of Grants Pass, Oregon, in regular session this 20th day of April, 2016, with the following specific roll call vote:

AYES:

NAYS: **ABSTAIN:** **ABSENT:**

SUBMITTED to and _____ by the Mayor of the City of Grants Pass, Oregon, this ____ day of April, 2016.

_____
Darin Fowler, Mayor

ATTEST:

_____ Date submitted to Mayor: _____
Karen Frerk, City Recorder

Approved as to Form, Mark Bartholomew, City Attorney _____

Exhibit A

Schedule 12-2. Permitted Uses and Site Plan Review Procedures																	
	Zoning Districts																
	RESIDENTIAL								COMMERCIAL					INDUSTRIAL		
	LR	MR		HR		HRR			COMMERCIAL					EMPLOYMENT		
Land Use Types	R-1-12 R-1-10 R-1-8	R-1-6	R-2	R-3 (R-3-1)	R-3-2 (p)	R-4 (R-4-1)	R-4-2 (l)(p)	R-5 (l)(p)	NC	GC (GC-1)	GC-2 (m)(p)	CBD	OR (n)	BP	IP	I (c)

4) Services																
a) Professional Office	PUD (k)	PUD (k)	PUD (k)	PUD (k)	PUD (k)	P-II	S-II	S-II	-	P-(a)	P-(a)	P-(a)	P-(a)	P-(b)	P-(b) (q)	-
b) Business Office	PUD (k)	PUD (k)	PUD (k)	PUD (k)	PUD (k)	PUD (k)	PUD (k)	PUD (k)	-	P-(a)	P-(a)	P-(a)	P-(a)	P-(b)	-	-
c) Limited Office	P-II	P-II	P-II	P-II	P-II	P-II	S-II	S-II	-	-	-	-	-	-	-	-
d) Repair, Maintenance, Commercial	-	-	-	-	-	-	-	-	-	P-(a)	P-(a)	P-(a)	-	P-(b)	-	P-(b)
e) Auto Service Station	-	-	-	-	-	-	-	-	-	P-(a)	P-(a)	-	-	P-(b)	-	-
f) Commercial Eating/Drinking Establishment	PUD (k)	PUD (k)	PUD (k)	PUD (k)	PUD (k)	PUD (k)	PUD (k)	PUD (k)	P-(a)	P-(a)	P-(a)	P-(a)	-	P-(b)	-	-
g) Hotel/Motel	-	-	-	-	-	-	-	-	-	P-(a)	P-(a)	P-(a)	-	-	-	-
h) RV Parks	-	-	-	-	-	-	-	-	-	P-III	P-III	-	-	-	-	-
i) Day Care/Family, per 14.310	S-I-A	S-I-A	S-I-A	S-I-A	S-I-A	S-I-A	S-I-A	S-I-A	S-I-A (g)(o)	S-I-A	S-I-A	S-I-A	PUD	S-I-A (g)	S-I-A (g)	S-I-A (g)
j) Day Care/Group, per 14.320	P-II	P-II	P-II	P-II	P-II	P-II	P-II	P-II	-	P-II	P-II	P-II	-	P-II	-	-
k) Group Care	PUD (k)	PUD (k)	PUD (k)	P-III	P-III	P-III	P-III	P-III	-	P-(a)	P-(a)	P-(a)	-	-	-	-
l) Hospitals	-	-	-	-	-	P-III	S-III	S-III	-	P-III	P-III	-	-	-	-	-
m) Vet. Clinics	-	-	-	-	-	-	-	-	-	P-(a)	P-(a)	-	-	P-(b)	-	-
n) Commercial Accessory -Building -Use	 - -	 - -	 - -	 - -	 - -	 - -	 - -	 - -	 S-(h) S-EX	 S-(h) S-EX	 S-(h) S-EX	 S-(h) S-EX	 S-(h) S-EX	 S-(h) S-EX	 - -	 - -
o) Bed & Breakfast, per 14.420	P-III	P-III	P-III	P-III	P-III	P-II	S-II	S-II	-	P-(a)	P-(a)	P-(a)	-	-	-	-
p) Voluntary Parking -Local Impact -Area Impact	 - -	 - -	 P-II P-III	 P-II P-III	 P-II P-III	 P-II P-III	 - -	 - -	 - -	 - -	 - -	 - -	 - -	 - -	 - -	 - -
q) Personal Service	PUD (k)	PUD (k)	PUD (k)	PUD (k)	PUD (k)	P-II	S-II	S-II	P-(a)	P-(a)	P-(a)	P-(a)	P-(a)	P-(b)	-	-
r) Self-Storage	S-(a)(s)	S-(a)(s)	S-(a)(s)	S-(a)(s)	S-(a)(s)	S-(a)(s)	S-(a)(s)	S-(a)(s)		S-(a)(r)	S-(a)(r)			P-(a)	P-(a)	
s) Social Services Facility	-	-	-	-	-	-	-	-	-	-	-	-	-	P-III	-	P-III

7) Industrial																
a) Repair Maintenance, Industrial	-	-	-	-	-	-	-	-	-	-	-	-	-	P-(b)	-	P-(b)
b) Indoor	-	-	-	-	-	-	-	-	-	-	-	-	-	P-(b)	P-(b)	P-(b)
c) Outdoor	-	-	-	-	-	-	-	-	-	-	-	-	-	-	-	P-(b)
d) Prohibited	-	-	-	-	-	-	-	-	-	-	-	-	-	X	X	X
e) Industrial Accessory -Building -Use	- -	- -	- -	- -	- -	- -	- -	- -	- -	- -	- -	- -	- -	S-(h) S-I-EX	S-(h) S-I-EX	S-(h) S-I-EX
f) Outdoor Storage	-	-	-	-	-	-	-	-	-	-	-	-	-	P-II	-	P-II
g) Warehouse														P-(b)	P-(b)	P-(b)

Table Legend:

P = Permitted Use
S = Secondary Use. Secondary uses are allowed as a permitted use, but only when provided in conjunction with permitted uses as specified in Section 12.028(2)
- = Use Not Permitted
X = Use Specifically Prohibited (Uses defined in Article 30 as "Industrial, Prohibited")
C = Use Conditionally Permitted (See Article 16)
PUD = Planned Unit Development

I-EX = Type I Procedure, Exempt from Development Permit Review, Section 2.033
I-AU = Type I Procedure, Administrative Use Permit Review Only, Section 2.034
I-A= Type I Procedure, Building Permit Serves as Development Permit, Section 2.035
I-B= Type I Procedure, Director's Decision without Comment Period, Section 2.036
I-C= Type I Procedure, Director's Decision with Comment Period, Section 2.037
II = Type II Procedure, Hearings Officer's Decision, Section 2.040
III = Type III Procedure, Planning Commission's Decision, Section 2.050
IV-A = Type IV Procedure, City Council Decision without Planning Commission Recommendation, Section 2.060
IV-B = Type IV Procedure, City Council Decision with Planning Commission Recommendation, Section 2.060
V = Type V Procedure, Joint Board of County Commissioners & City Council Decision with Planning Commission Recommendation, Section 2.070

Table Notes:

(a) A Type II Procedure is required if the subject property adjoins a residential zone, otherwise a Type I-C Procedure is required.

(b) A Type II Procedure is required if the subject property adjoins a residential or commercial zone, otherwise Type I-C Procedure is required.

(c) If within the Spalding Regionally Significant Industrial Area (RSIA) Overlay, an applicant can request an Expedited Industrial Site Plan Review procedure; otherwise procedures within Schedule 12-2 apply.

(d) Type I-A, except the following are exempt (Type I-EX): operation, maintenance, repair, and preservation of existing transportation facilities; dedication or public acquisition of rights-of-way and easements; authorization of construction and construction of facilities and improvements, where the improvements are within the existing right-of-way or easement area or are consistent with clear and objective dimensional standards; and emergency measures necessary for the safety and protection of property.

(e) Manufactured Dwelling Parks are not permitted in commercial or industrial zones or commercial or industrial Comprehensive Plan land use districts. Siting of an individual home within an approved manufactured dwelling park requires a Type I-A procedure.

(f) An existing residential dwelling unit is a permitted use in this zone. In zones where a new residential dwelling unit is not a permitted use, this provision allows the existing residential dwelling unit to continue or expand without being subject to the nonconforming <u>use</u> provisions of the Development Code. There may be nonconforming <u>development</u> provisions that are applicable. If an existing dwelling unit is removed in a zone where a new dwelling unit is not permitted, it shall not be replaced.

In zones where a new residential dwelling unit is not a permitted use, this provision does not allow for expansion that increases the number of dwelling units.

(g) In zones where a new residential dwelling unit is not a permitted use, this provision allows for this use associated with the existing residential dwelling as authorized in Article 14.

(h) A commercial or industrial accessory building of 400 square feet or less that comprises less than 25 percent of the existing floor area of buildings and meets the definition of a minor modification in Section 19.058 of this Code is reviewed through a Type I-A procedure. All other commercial or industrial accessory buildings are subject to the applicable site plan review procedures.

A watchman's cottage is permitted as a new residential dwelling unit if it serves a direct industrial function. (12.341)

(i) A Type I-A Procedure is required for water and sewer pump stations. All other minor public facilities are reviewed through the procedure specified in table.

(j) A Type III Procedure is required if the tower height exceeds the zone height limit, otherwise a Type II Procedure is required.

(k) Trade and service uses permitted through a PUD in residential zones are subject to the limitations in Article 18.

(l) In the R-4-2 and R-5 zones, office uses are Secondary Uses, See Section 12.050

(m) In the GC-2 zone, residential uses are Secondary Uses, See Section 12.050

(n) In the OR zone, residential uses are Secondary Uses, See Section 12.050

(o) In the NC zone, upper-story residential uses are Secondary Uses, See Section 12.050

(p) In addition to the uses listed in Schedule 12-2, the following shall be permitted as primary uses rather than only as secondary uses or as part of a PUD in the specified zone, subject to all applicable provisions of this Code:

1. **R-3-2 zone.**
    a. One single-family detached dwelling on an existing lot of record, and permitted accessory uses, including an accessory dwelling unit, meeting the requirements of this section.

b. The existing lot of record shall be existing on or before November 12, 2014, or shall be a lot or parcel that was part of an approved land division application which was submitted on or before November 12, 2014.
c. This shall include replacement of an existing single-family detached dwelling on a lot of record meeting the requirements of this section.

2. **R-4-2 and R-5 zones.**
   a. One single-family detached dwelling on an existing lot of record, and permitted accessory uses, including an accessory dwelling unit, meeting the requirements of this section.
   b. One duplex, two detached single-family dwellings, or division of a lot of record described below to include two attached units (with one common zero-lot line), subject to all applicable building code, utility, and Development Code requirements.
   c. The existing lot of record shall be existing on or before November 12, 2014, or shall be a lot or parcel that was part of an approved land division application which was submitted on or before November 12, 2014 which has not expired.
   d. This shall include replacement of an existing dwelling on a lot of record meeting the requirements of this section.

3. **GC-2 zone.**
   a. One single-family detached dwelling on an existing lot of record, and permitted accessory uses, including an accessory dwelling unit, meeting the requirements of this section.
   b. The existing lot of record shall be existing on or before November 12, 2014, or shall be a lot or parcel that was part of an approved land division application which was submitted on or before November 12, 2014.
   c. This shall include replacement of an existing single-family detached dwelling on a lot of record meeting the requirements of this section.

(q) Professional Office use permitted in the Industrial Park District only when subject property is located within the Medical Overlay District.

(r) Self-Storage in General Commercial zones shall meet the standards in Section 14.710

(s) Self-Storage in Residential zones shall meet the standards in Section 14.720

Article 14: Certain Uses

14.700 Self-Storage in General Commercial and Residential Zones

The review procedure for Self-Storage shall be as provided in Schedule 12-2

14.710 Development Standards for Self-Storage in General Commercial Zones

(1) An approved primary use or uses must exist on the same property between the Self-Storage and all street frontages.

(2) The approved primary use(s) must be in a building or buildings totaling at least 2,500 square feet in area.

(3) The building(s) containing the approved primary use(s) shall be oriented to obscure view of the Self-Storage from all rights-of-way to the greatest extent practical.

(4) All buildings containing the approved primary uses(s) must meet the Architectural Standards in Section 20.400-20.495.

(5) The development of the site must meet Article 23 Landscaping and Buffering Development Standards.

(6) The development must meet all other applicable provisions of this Code.

14.720 Development Standards for Self-Storage in Residential Zones

(1) Self-Storage in residential zones shall only be made available for use by residents of the residential development (for example: multi-family complex, residential subdivision, PUD) containing the Self-Storage facility. At no time is the Self-Storage facility permitted to serve non-residents.

(2) Self-Storage in residential zones shall be maintained and operated by the owner of the complex in the case of multi-family developments held in common ownership, and by a legally formed homeowners association in the case of residential developments held in separate ownership (for example: residential subdivision, PUD, condominium).

(3) The Self-Storage buildings shall be built in a location and manner that obscures their view from all rights-of-way and paths to the greatest extent practical.

(4) The development of the site must meet Article 23 Landscaping and Buffering Development Standards. The Self-Storage facility must meet the Commercial standards for Landscape and Buffering.

(5) The development must meet all other applicable provisions of this Code.

Article 30: Definitions

30.020 Definitions

School: Facilities for the instruction of children, youth and adults. School uses are of two types:

(1) Public: Public, private or parochial, kindergarten, primary, secondary and high schools and colleges, including accessory administrative uses, but not child care facilities, except when operated in conjunction with a school.

(2) Technical: Technical, business, trade, dancing, music or sports schools, including accessory administrative uses.

Self-Storage: A commercial facility in which customers can rent space to store possessions; or

A storage facility in a residential neighborhood or development which, in accordance with Section 14.720, is only available for use by the residents of that neighborhood or development.

Service Station: An establishment selling fuel and oil for vehicles; selling, servicing and installing tires, batteries, accessories and related products; furnishing minor repair and service when conducted entirely within an enclosed building, and at which incidental services are conducted. "Minor repair and service," as used in this definition, shall be understood to exclude activities such as painting, bodywork, steam cleaning, and/or tire recapping.

Visual Obstruction: Any fence, hedge, tree, shrub, device, wall or structure between the elevations of 2 1/2 feet and 8 feet above the adjacent curb height or above the elevation of gutter line of street edge where there is no curb, as determined by the City Engineer, and so located at a street, drive, or alley intersection as to limit the visibility of pedestrians or persons in motor vehicles on said streets, drives, or alleys.

Warehouse: A large building for storing items before they are sold, used, or sent out to retail shops.

Watchman's Cottage: See "Residential Uses in Industrial Zones."

Item: Resolution authorizing the City Manager to create a School Marshal position and amend the Classification Plan. Date: April 20, 2016

SUBJECT AND SUMMARY:

This resolution creates the School Marshal position in the Public Safety Department and amends the Classification Plan.

RELATIONSHIP TO COUNCIL GOALS:

This supports Council's goal of **KEEP CITIZENS SAFE** and **LEADERSHIP** by providing appropriately trained staff to increase school safety and improve preparedness for emergencies.

CALL TO ACTION SCHEDULE:

Staff recommends Council take action as soon as possible to enable Public Safety to place School Marshals, prior to the end of the current school year, to establish protocol and procedures in preparation for school year '16/17. Call to action schedule: April 20, 2016.

BACKGROUND:

The School Marshal classification is a part-time, State of Oregon certified sworn position. It was created specifically to work at our local schools in a "plain clothes" duty assignment to provide police protection to our schools and children. The School Marshal is a limited-duty, limited-duration (school year) classification and therefore does not come with the high cost of full- time, full-service sworn police officers which include higher salaries and benefits. The School Marshals will work between 20-25 hours per week, carry concealed firearms, and rotate among the various District 7 schools. The School Marshal will work with school staff to ensure safety on our school campuses. The positions will mostly be filled with retirees who meet the job requirements.

The School Marshal position was presented to Council during the Strategic Planning Session and does not require an increase in full-time employees (FTE).

COST IMPLICATION:

Revenue Source: Department of Public Safety personnel budget.

The budgetary impact would be minimal as the actual personnel costs would be reimbursed by District 7 Schools.

ITEM: 3.a. RESOLUTION AUTHORIZING THE CITY MANAGER TO CREATE A SCHOOL MARSHAL POSITION AND AMEND THE CLASSIFICATION PLAN.

Staff Report (continued):

ALTERNATIVES:

Council can choose to approve the creation of the School Marshal; or
Council can choose not to approve the new position.

RECOMMENDED ACTION:

Staff recommends the Council approve the creation of the School Marshal position.

POTENTIAL MOTION:

I move to authorize the City Manager to approve the creation of the School Marshal position.

RESOLUTION NO.

A RESOLUTION OF THE COUNCIL OF THE CITY OF GRANTS PASS AUTHORIZING THE CITY MANAGER TO CREATE A SCHOOL MARSHAL POSITION AND AMEND THE CLASSIFICATION PLAN.

WHEREAS:

1. The City of Grants Pass has a Classification Plan defining duties, responsibilities and knowledge of a person holding that position; and

2. The evaluation of job descriptions, the scope of duties, responsibilities and defined experience and education for each, is prompted by many situations; and

3. The creation of a School Marshal in the Public Safety Department will positively affect our organization and the community; and

4. The School Marshal position will increase safety in City schools.

NOW, THEREFORE, BE IT RESOLVED by the Council of the City of Grants Pass that the City Manager is authorized to create the School Marshal position, which is attached hereto as Exhibit 'A', and amend the Classification Plan.

EFFECTIVE DATE of this Resolution shall be immediate upon its passage by the City Council and approval by the Mayor.

ADOPTED by the Council of the City of Grants Pass, Oregon, in regular session this 20th day of April, 2016.

SUBMITTED to and _____ by the Mayor of the City of Grants Pass, Oregon, this ____ day of April, 2016 to be effective on the date indicated as adopted by the City Council.

_____
Darin Fowler, Mayor

ATTEST:

_____ Date submitted to Mayor: _____
Karen Frerk, City Recorder

Approved as to Form, Mark Bartholomew, City Attorney _____

EXHIBIT A

CITY OF GRANTS PASS, OREGON
CLASS SPECIFICATION

SCHOOL MARSHAL

FLSA STATUS:	GROUP:
Non-Exempt	Temporary/On-Call

CLASS SUMMARY:
The School Marshal is a Public Safety Non-Sworn Stand Alone Class. Incumbents are responsible for maintaining campus security, addressing inappropriate student conduct, interacting with students and faculty, and assisting Police Officers during emergency situations on school campuses.

TYPICAL CLASS ESSENTIAL DUTIES: These duties are a representative sample; position assignments may vary.

- Maintain school campus security, student safety, monitoring and addressing inappropriate conduct on school campus, and responding to requests for assistance from faculty.
- Complete incident reports per school and department policy.
- Interact with students, administrators, faculty and parents.
- Assist School Resource Officer (SRO) with school staff training and respond to security issues and inquiries from school personnel.
- Provide assistance to the SRO during emergency situations on campus, and respond to emergent situations when the SRO is not present.
- Safely and appropriately operate a firearm and meet certification and annual training requirements.
- Operate a motor vehicle to attend off-site meetings and to transfer schools when requested.

Training and Experience: High School Diploma or equivalent (G.E.D) and a minimum of five (5) years' experience as a Certified Police Officer. Certified Police Officer experience must be within 5 years of appointment to position.

Licensing Requirements:
- Valid Oregon Driver's License – Class C
- Department of Public Safety Standards and Training (DPSST) Basic Police Officer (or equivalent)
- CPR/AED and First Aid Certificate

Knowledge:
Knowledge of:
- Appropriate communication with a variety of individuals of varied backgrounds;
- Various law enforcement techniques and procedures;
- Personal computers and related software programs;

- Safe and appropriate operation of a firearm and motor vehicle; and,
- Applicable Federal, State, and local laws, rules and regulations.

Skills (positions in this class typically require):
Skill in:

- Basic computer usage;
- Reporting writing;
- Analyzing situations quickly and objectively to determine the proper course of action;
- Safe and appropriate use and care of firearms;
- Radio operation;
- Safe operation of a motor vehicle;
- Maintaining effective work relationships;
- Communication and interpersonal skills as applied to interaction with coworkers, supervisors and the general public, sufficient to exchange or convey information and receive work direction.

Physical Requirements:
Positions in this class typically require: grasping, fingering, feeling, talking, hearing, seeing, repetitive motions, climbing, balancing, stooping, kneeling, reaching, standing, walking, pushing, pulling, and lifting.

Medium Work: Exerting up to 50 pounds of force occasionally, and/or up to 20 pounds of force frequently, and/or up to 10 pounds of force constantly to move objects.

Positions in this class require regular attendance and punctual employee presence.

Note:
The above job description is intended to represent only the key areas of responsibilities; specific position assignments will vary depending on the business needs of the department. When job duties and responsibilities change and develop, this job description will be reviewed and is subject to change based on business needs of the City.

Incumbents must be at least 21 years of age and successfully pass a comprehensive background investigation, including a criminal history check, medical evaluation, and a drug screen.

Classification History:
Created: , Resolution No.

Item: Resolution amending the procedures for conduct of business, Section 8 Meeting Dates. Date: April 20, 2016

SUBJECT AND SUMMARY:

This resolution would change the days and times for Council Workshops from every Monday at 11:45 am to the 1st and 3rd Mondays from 6-9 pm.

RELATIONSHIP TO COUNCIL GOALS:

This supports Council's goal of **LEADERSHIP** by ensuring efficiency and effectiveness in Council proceedings.

CALL TO ACTION SCHEDULE:

Call to action schedule: N/A.

BACKGROUND:

At its March 14 workshop, Council requested staff to bring forward the option of changing the days and times of its workshops. Currently, Council workshops are held every Monday at 11:45 am. Council is requesting workshops be held the 1st and 3rd Monday (or Tuesday if Monday is a holiday) from 6 – 9 pm. Workshops may be extended beyond that time with a majority vote of the Council.

COST IMPLICATION:

None.

ALTERNATIVES:

Council could amend the Council Rules changing the days and times of the workshops; or
Council could choose to not amend the Council Rules.

RECOMMENDED ACTION:

None.

POTENTIAL MOTION:

I move to amend the Council's procedures for conduct of business, Section 8 Meeting Dates.

ITEM: 3.b. RESOLUTION AMENDING THE PROCEDURES FOR CONDUCT OF BUSINESS, SECTION 8 MEETING DATES.

RESOLUTION NO.

A RESOLUTION OF THE COUNCIL OF THE CITY OF GRANTS PASS AMENDING THE PROCEDURES FOR CONDUCT OF BUSINESS, SECTION 8 MEETING DATES.

WHEREAS:

1. The City Council desires to adopt procedures to facilitate the orderly and efficient conduct of business before the Council; and

2. The Council desires to modify said Rules as noted herein and shall retain the right to further modify the procedures as it feels will best fit its needs.

NOW, THEREFORE, BE IT RESOLVED by the Council of the City of Grants Pass that the procedures regarding the conduct of Council business previously adopted by the Council are in full force and affect except as amended and added to as follows:

Section 1. **RULES OF PROCEDURE.** Except as modified herein or hereafter, Robert's Rules of Order as set forth in the "Robert's Rules of Order Newly Revised, 10th Edition" edited by Henry Robert III and William J. Evans, Daniel Honemann, Thomas Balch shall be applied to govern the procedure of the Council. However, the validity of an ordinance, resolution, or other action as applied by a court of competent jurisdiction shall not be affected by a failure to observe said Rules.

Section 2. **DATE OF ADOPTION.** Unless formally vetoed by the Mayor as set forth in the Charter, ordinances without an emergency clause shall take effect 30 days after the date of adoption by the Council or thereafter at an alternate date specified in the ordinance.

Section 3. **EMERGENCY CLAUSE.** Unless formally vetoed by the Mayor as set forth in the Charter, ordinances with an emergency clause shall take effect immediately on the date of adoption by the Council or thereafter at an alternate date specified in the ordinance. The "Whereas" portion of an ordinance containing an emergency clause shall generally describe the basis of the need for immediate action.

Section 4. **LAND USE CRITERIA.** A motion in final form regarding a land use decision shall address the criteria set forth in the Development Code as necessary to support the decision before any appellate body.

Section 5. **ATTENDANCE AND TELEPHONIC ATTENDANCE.**

A. Councilors and the Mayor must be physically present at a meeting except as follows:

1. A Councilor or the Mayor may attend the meeting and fully participate as if physically present via a telephone conference call or other electronic communication so long as all persons present at the meeting can hear discussions clearly to and from the Councilor or the Mayor not physically present. No Councilor

or the Mayor may act as chairperson of any meeting if attending by telephone.

2. Attendance by electronic communication shall be limited to six times per Councilor or the Mayor per calendar year beginning in January of each year. No more than 2 members shall be allowed to attend by telephone at any given meeting. Attendance by telephone will be arranged in order of notice by member to the governing body or the City Administrative office.

B. Notwithstanding Section 5(A) above, a Councilor or the Mayor must be physically present to attend any Executive Session.

Section 6. **AGENDA.** The City Manager shall prepare an Agenda of the business to be presented at a regular Council meeting. The Mayor, Council President, City Manager and Assistant City Manager commonly will discuss the content of the Agenda at the semi-monthly meeting prior to formally setting the Agenda. Council members commonly request topics for the Agenda through communication with the Mayor, Council President or City Manager which are then considered at the semi-monthly meeting.

The Agenda for current and future meetings and workshops shall be reviewed by the Council on the Monday workshop preceding the regular meeting. At the workshop, with the consent of the Council, any item may be removed from the agenda or added to the agenda. At the workshop, any item can be added to a future agenda or workshop with the support of three Council members.

At the regular meeting, the Agenda may be altered in accordance with the Rules of Procedure. Nothing in this section should be construed to alter any authority granted under the Charter.

Section 7. **ORDER OF BUSINESS.** Unless modified at the workshop or through the Rules of Procedure, items on the Agenda shall be considered in the following order and as printed on the "COUNCIL AGENDA" page of the Council Packet. (Note: This shall not be construed to prevent the Council from considering items under New Business which are not on the Agenda.):

Invocation, Flag Salute
Roll Call
Proclamations & Presentations
Public Comment (items not on the agenda)
Public Hearings
Consent Agenda (including approval of minutes and acknowledgment of receipt of Committee Reports)
Council Actions
Matters from Mayor, Council and Staff
Executive Session

Section 8. **MEETING DATES.** Unless the Council sets a different date, regular Council meetings shall be scheduled for the 1st and 3rd Wednesday of each month (not including Holidays). Meetings times will be from 6 – 9 pm. Meetings may be extended beyond that time with a majority vote of the Council. Unfinished business shall automatically be placed on the next regular Council agenda, unless the Council specifies a different time for consideration of such items, and additional notices of said continuation shall not be required.

The Council will meet the 1st and 3rd Monday (or Tuesday if Monday is a holiday) for a less formal Council meeting which will be referred to as a Workshop in order to discuss City business. Workshop times will be from 6 – 9 pm. Workshops may be extended beyond that time with a majority vote of the Council.

As needed, City Council or the City Manager may notice and conduct business during the Workshop, which would normally be conducted during a regular Council meeting. Workshops shall not constitute a regular meeting for the purpose of determining attendance under Chapter VII Section 1 of the City Charter. Unless directed otherwise by a majority of the Council, the City Manager may cancel a meeting if there is insufficient business pending before the Council to warrant a meeting.

Section 9. **COMMENCEMENT & ADJOURNMENT.** Meetings shall commence at the time selected by the City Council and in accord with the Charter, and shall adjourn with a majority vote of the City Council in accord with the rules of procedure.

Section 10. **PRESENTATION LIMITS.** Except as noted, the following time limits apply to presentations at a regular Council meeting (however, these time limits do not include time for responding to questions from the Council):

A. Public Comment on issues not contained in the Agenda: 3 minutes
B. Public Comment on issues being considered by Council: 3 minutes
C. For Land Use Matters, the following limits apply:

15 minutes	Staff, Applicant, Appellant - Initial presentations on any particular issue.
5 minutes	Staff, Applicant, Appellant - Rebuttal presentation on any particular issue.
3 minutes	General Public - per individual - any public hearing.

NOTE: The time for staff, applicant, and appellant presentations may be allocated to multiple individuals. However, all or portions of the limit for individuals may not be allocated to another person or added to another time allotment. The Council by a majority vote at the meeting or at a noon workshop preceding the regular meeting, may authorize an increase in the specified times.

D. 10 minutes for presentations by Staff, Applicant, Appellant on non-land use matters.
E. The Council should, but is not required to, give deference to requests where there are complex issues or where the individual represents a larger group of citizens.

Section 11. DISCUSSION WITHOUT A MOTION. Discussion may proceed prior to a motion being made and is not out of order unless it is not germane to the issue under consideration.

Section 12. EQUAL OPPORTUNITY FOR DISCUSSION. Every Councilor shall be allowed to speak on the same item of business prior to a Councilor or the Mayor exercising a second opportunity to speak.

Section 13. RECOGNITION BY THE PRESIDING OFFICER. Although a Councilor may verbally request the presiding officer for an opportunity to speak, it is preferred that a Councilor raise their hand for recognition.

Section 14. ALTERNATE RECOGNITION. Should the presiding officer be occupied with other business and therefore unaware of one or more Councilors requesting an opportunity to speak, a Councilor may be recognized by the President of the Council or in their absence by the most senior Councilor.

Section 15. CLOSING PUBLIC TESTIMONY. Once public testimony has closed, it may not be reopened without the consent of the Council. If consent is not clear, a formal motion, second, and votes are required. Questions for staff are not considered public testimony.

Section 16. SECOND READING AT SAME SESSION AS FIRST READING. No ordinance shall be placed upon second reading during the meeting at which a first reading occurred except by unanimous consent of the Councilors voting thereon.

Section 17. MOTION TO RECONSIDER. A motion to reconsider a previous vote is in order if the motion is made by a person who voted in the majority and is made not later than the next regular meeting after the original vote was taken. When any vote shall be reconsidered, the Council may, at the same time, proceed to reconsider any previous vote or order in relation to the same subject matter without further notice. A vote to reconsider is then followed by a re-vote on the previous question. When reconsideration is not had as provided herein, such matter or one substantially the same may again be considered by the Council after six months have elapsed or if the motion to reconsider is passed by the Council by a 2/3 vote of those present.

Section 18. PUBLIC TESTIMONY. After the staff presentation, the public testimony portion of a hearing is for the purpose of hearing from applicants, appellants, and the general public. Each presenter shall be given an opportunity to speak, free of any attempt by Councilors, the Mayor, or staff to lead the testimony, embarrass the individual, or comment on the person's testimony either in favor or against an issue. Although Councilors, the Mayor, and staff may inquire of the presenter for clarification of questions germane to the criteria or issue, Councilors, the Mayor, and staff shall refrain from interjecting their own testimony or opinions for or against the issue until the public testimony is closed and the issue is returned to the Council for discussion and action.

The presiding officer shall be responsible for ensuring order and decorum is maintained. Comments and disagreements should be addressed to the topic at hand and avoid negative personal remarks. Attendees and speakers are required to strictly abide by the directions of the presiding officer. Behavior or actions that are unreasonably loud or disruptive may be cause of removal from Council meetings. Disruptive behavior includes engaging in violent or distracting action, making loud or disruptive noise or using loud or disruptive language and refusing to obey an order of the presiding officer.

Section 19. MEETING MINUTES. Council meeting minutes shall be transcribed in brief summary format. Council meetings and workshops shall be recorded with audio and video indexing.

EFFECTIVE DATE. This Resolution shall be effective immediately upon its passage by the City Council and approval by the Mayor.

ADOPTED by the Council of the City of Grants Pass, Oregon, in regular session this 20th day of April 2016.

SUBMITTED to and _____ by the Mayor of the City of Grants Pass, Oregon, this ____ day of April, 2016 to be effective on the date indicated as adopted by the City Council.

_____
Darin Fowler, Mayor

ATTEST:

_____ Date submitted to Mayor_____
Karen Frerk, City Recorder

Approved as to form, Mark Bartholomew, City Attorney _____

Item: Resolution declaring certain property surplus and authorizing its appropriate disposal.

Date: April 20, 2016

SUBJECT AND SUMMARY:

Consider the declaration of materials and appurtenances listed in Exhibit 'A' as surplus and authorize the disposal of same.

RELATIONSHIP TO COUNCIL GOALS:

This supports Council's goal of **LEADERSHIP** by being fiscally responsible and ensuring efficiency and effectiveness in City operations.

CALL TO ACTION SCHEDULE:

The schedule is defined by the ability to sell the listed material as it could be used for other purposes and currently is considered obsolete and has been replaced by newer, more efficient materials or equipment. Call to action schedule: April 20, 2016.

BACKGROUND:

The Public Works Department has determined that the materials and equipment listed in Exhibit 'A' are of no value to the City but may hold value to other agencies or members of the public. If the materials are made surplus they will be sold at auction and the revenues from the sales will be returned to the wastewater and street budgets.

COST IMPLICATION:

Revenue Source: This action will produce revenue that will be deposited in the Wastewater and Street Funds.

ALTERNATIVES:

1. Council can authorize the City Manager to bid the sale of the materials and equipment listed in Exhibit 'A'.

2. Council could decide not to authorize the sale of the materials and equipment listed in Exhibit 'A' and staff can continue to store and maintain the materials and equipment.

ITEM: 3.c. RESOLUTION DECLARING CERTAIN PROPERTY SURPLUS AND AUTHORIZING ITS APPROPRIATE DISPOSAL.

Staff Report (continued):

RECOMMENDED ACTION:

Staff recommends the Council authorize the City Manager to declare the material listed on Exhibit 'A' as surplus property and is authorized to dispose of same appropriately.

POTENTIAL MOTION:

I move to adopt the resolution authorizing the City Manager to declare the material listed on Exhibit 'A' as surplus property and is authorized to dispose of same appropriately.

RESOLUTION NO.

A RESOLUTION OF THE COUNCIL OF THE CITY OF GRANTS PASS DECLARING CERTAIN PROPERTY SURPLUS AND AUTHORIZING ITS APPROPRIATE DISPOSAL.

WHEREAS:

1. The City has equipment and materials which are no longer needed; and

2. It is prudent to dispose of such unneeded property.

NOW, THEREFORE, BE IT RESOLVED by the Council of the City of Grants Pass that the City Manager is authorized to declare the equipment and material listed on Exhibit 'A' as surplus property and is authorized to dispose of same appropriately.

EFFECTIVE DATE of this Resolution shall be immediate upon its passage by the City Council and approval by the Mayor.

ADOPTED by the Council of the City of Grants Pass, Oregon, in regular session this 20th day of April, 2016.

SUBMITTED to and _____ by the Mayor of the City of Grants Pass, Oregon, this ____ day of April, 2016 to be effective on the date indicated as adopted by the City Council.

_____
Darin Fowler, Mayor

ATTEST:

_____
Karen Frerk, City Recorder

Date submitted to Mayor: _____

Approved as to Form, Mark Bartholomew, City Attorney _____

Exhibit 'A'

1. 1 – 1978 Stationary Emergency Generator. 277/480 Volts, Three Phase, 75KW, 500 gallons diesel fuel tank, switch gear & battery charger.

2. Approximately 8,000 pounds of obsolete and damaged light poles. Poles are of various vintages, sizes and configurations and do not match any current configuration in use across the City.

CITY OF GRANTS PASS
PARKS & COMMUNITY DEVELOPMENT DEPARTMENT

COMPREHENSIVE PLAN MAP AND ZONE MAP AMENDMENT
HISTORIC DISTRICT EXPANSION
FINDINGS OF FACT- CITY COUNCIL

Procedure Type:	Type IV: Historic Buildings and Sites Commission Recommendation and City Council Decision
Project Number:	15-40200004
Project Type:	Comprehensive Plan Map and Zone Map Amendment
Applicant:	City of Grants Pass
Planner Assigned:	Justin Gindlesperger
Application Received:	December 24, 2015
Application Complete:	December 24, 2015
Date of Staff Report:	February 11, 2016
Date of HBSC Public Hearing:	February 18, 2016
Date of HBSC Findings of Fact:	March 17, 2016
Date of City Council Staff Report:	March 28, 2016
Date of City Council Hearing:	April 6, 2016
Date of Findings of Fact:	April 20, 2016

I. PROPOSAL:

The proposal is for a Comprehensive Plan Map Amendment and Zoning Map Amendment to expand the Historic Special Purpose District to encompass additional properties within the downtown area in order to enhance the protection of the City's historical features.

II. AUTHORITY AND CRITERIA:

Sections 13.5.5 and 13.8.3 of the Grants Pass Urban Area Comprehensive Plan provide that joint review by the City Council and Board of County Commissioners shall be required for amendment and revision to Comprehensive Plan findings, goals, policies, and land use maps of the Comprehensive Plan. However, the 1998 Intergovernmental Agreement modified that provision with the result that the City Council will make the decision, and the County will have automatic party status.

Section 13.8.3 of the Comprehensive Plan provides that notice shall be as provided in Section 2.060 of the *Development Code* for a Type IV procedure. Sections 4.045 and 13.442 authorize the Historical Buildings and Sites Commission to make a recommendation to the City Council and authorize the City Council to make a final

decision on an application for historic designation or amendment to the historic district requiring a Type IV procedure.

The text or map of the Comprehensive Plan may be recommended for amendment and amended provided the criteria in Section 13.5.4 of the Comprehensive Plan Policies Document are met. The Historic Special Purpose District may be amended provided the Criteria in Section 4.045 of the *Development Code* are met.

The text of the Development Code may be recommended for amendment and amended provided the criteria in Section 4.103 of the Development Code are met.

III. APPEAL PROCEDURE:

The City Council's final decision may be appealed to the State Land Use Board of Appeals (LUBA) as provided in state statutes. A notice of intent to appeal must be filed with LUBA within 21 days of the Council's written decision.

IV. PROCEDURE:

A. An application for a Development Code text amendment was submitted and deemed complete on December 24, 2015. The application was processed in accordance with Section 2.060 of the Development Code.

B. Notice of the proposed amendment was mailed to the Oregon Department of Land Conservation and Development (DLCD) on December 27, 2015, in accordance with ORS 197.610 and OAR Chapter 660-Division 18.

C. Notice of the February 18, 2016, Historic Buildings and Sites Commission (HBSC) hearing was mailed to potentially interested parties on January 27, 2016.

D. Public notice of the February 18, 2016, HBSC hearing was published in the newspaper on February 11, 2016, in accordance with Sections 2.053 and 2.063 of the Development Code.

E. At the February 18, 2016 public hearing, the HBSC made a recommendation in support of the request.

F. The HBSC signed the Findings of Fact on March 17, 2016.

G. Notice of the March 16, 2016 City Council public hearing was mailed to potentially interested parties on February 24, 2016.

H. Public notice of the March 16, 2016 City Council public hearing was published in the newspapers on March 9, 2016, in accordance with Sections 2.053 and 2.063 of the Development Code.

I. A public hearing was held by the City Council on March 2, 2016. The Council made a motion to reconsider the Historic Design Guidelines on March 16, 2016 and postpone the Historic District Expansion to April 6, 2016.

J. Notice of the change of date of the public hearing was mailed to potentially interested parties on March 10, 2016.

K. A public hearing was held by the City Council on April 6, 2016 to consider the request. A roll call vote was taken during the public hearing and the City Council voted to approve the request.

V. SUMMARY OF EVIDENCE:

A. The basic facts and criteria regarding this application are contained in the March 28, 2016, City Council staff report and its exhibits, which are attached as Exhibit "A" and incorporated herein.

B. The minutes of the public hearing held by the City Council on April 6, 2016 are attached as Exhibit "B" and incorporated herein.

C. The PowerPoint presentation given by staff at the April 6, 2016, City Council hearing is attached as Exhibit "C" and incorporated herein.

D. Public comments letters are attached as Exhibit "D" and incorporated herein. Letters are from property owners and representatives within the proposed historic district and include Marcus Properties, LLC; Kirchoff Law Offices; Erik and Ann Kruiswyk; Next-Century Properties, LLC; Caveman Plaza Shopping Center, LLC; Bryan and Heidi Hall; Deborah L. Brownell; Robert and Genevieve Brink-Capriola and Mark G. Minnis; Vintage Corporation; The Music Shop, Inc.; Society of St. Vincent de Paul; Lee and Joan Walker; First Christian Church; Rogue River Hardware Enterprises, Inc.; 9th & I Properties, LLC; Linda L. Jordan; Albert and Linda Mehrabian; Robert W. Brutke; Beekman Corporation; Barry Lamontagne; Maurice and Meredith Ball; The Daily Courier; Walter and Christopher Cauble; Lisa Gragg; Ronald and Colene Martin; Charles Shedd; and John Roen.

VI. GENERAL FINDINGS - BACKGROUND AND DISCUSSION:

With increased pressure to convert historic sites and areas to new uses, many cities in Oregon are establishing historic districts to protect the culturally significant sites in their communities. The current Historic District boundaries were approved by the City Council in 2013 to protect the "old town" district along G Street, as identified in Policy 3.50 of the Comprehensive Plan.

The Historic Building and Sites Commission has identified additional resources in the downtown area, outside the current Historic District, that would benefit from expansion of the district. By expanding the Historic District, the City will be able to further preserve and protect the historic features in accordance with Section 13.411 of the Development Code. The expanded district will include properties along NW 6th Street between NW 'D' Street and SW 'J' Street and properties between SW 4th Street and SW 7th Street, south of the existing district.

As part of the proposed expansion, the HBSC recently developed design guidelines for local historic landmark structures and structures within the historic district. The design

guidelines will provide administrative review and approval for exterior improvements that conform to the design guidelines.

The Historic Building and Sites Commission outlined a "walking" historic area that featured additional resources in the downtown area, outside the current Historic District, that would benefit from the proposed expansion. Due to concerns over lack of pedestrian traffic in certain areas of the proposed district, the HBSC is supportive of a revised district boundary as presented by staff.

Any property owner within the proposed expansion may "opt out" of the proposed historic district. As of March 28, 2016, staff received requests for twenty six (26) parcels for refusal to consent to historic designation. Of the twenty six (26) requests, eight (8) are located outside the revised district boundary. The proposed district boundary includes a total of 115 parcels.

VII. FINDINGS IN CONFORMANCE WITH APPLICABLE CRITERIA:

A. For comprehensive plan map amendments, Comprehensive Plan Policy 13.5.4 requires that all of the following criteria be met:

CRITERION (a): Consistency with other findings, goals and policies in the Comprehensive Plan.

CITY COUNCIL Response: Satisfied. The proposal is consistent with the applicable Goals and Policies found in Element 8 ~ Economy and Element 13 ~ Land Use of the Comprehensive Plan for reasons summarized below.

Element 8 – Land Use

Goal: To improve, expand, diversify and stabilize the economic base of the community.

Policy 8.8(e) – "The City shall assist in maintaining the Downtown commercial area as a vital business and office district by encouraging private building owners to maintain and improve their buildings."

1st Conclusion under Criterion (a):

With increased pressure to convert historic sites and areas to new uses, many cities in Oregon are establishing historic districts to protect the culturally significant sites in their communities. Historic Districts protect and enhance the City's attractions and downtown core area. Along with protecting the structures and consideration towards complimenting the existing historic fabric of the downtown core area, Historic Districts also stabilize, and improve, property values for structures within those districts, providing incentives for property owners to maintain and improve their buildings.

Element 13. Land Use:

Goal: To provide a vision of the future through maps and policies that shall guide and inform the land use decisions of the present, in such a manner that:

(d) is responsive to the wishes of the citizens and property owners of the planning area, and

Policy 13.2.4 Other Maps:

The Development Code shall include a Zoning Map that shall include Special Purpose District Maps and Utility Maps, which maps and their criteria and standards shall meet the following basic functions:

(b) The Special Purpose District Maps and Standards shall determine which special development standards and review procedures, if any, apply to any given development proposal.

Policy 13.2.5 Special Purpose Districts:

Special Purpose Districts shall be adopted to include the following:

(c) Historic: delineating areas of historic value to the community, whose prmary function is to encourage viable and economic use of historic areas while conserving and enhancing the area's historic resources.

2nd Conclusion under Criterion (a):

While zoning is not ideally suited to deal with areas of specific needs, Special Purpose Districts are used to identify special development standards and review procedures. The Historic District serves to safeguard the City's historic, aesthetic and cultural heritage and protect areas or features that represent architectural history. The preservation of historic sites lends a sense of place and renovation of historic buildings can be less expensive than to provide equivalent floor area through new construction.

CRITERION (b): A change in circumstances validated by and supported by the database or proposed changes to the database, which would necessitate a change in findings, goals and policies.

CITY COUNCIL Response: Satisfied. The proposed amendment will not change the database and the underlying zoning will remain in place for the properties within the expanded Historic District. The proposed amendment would amend the plan and zoning map and would not require the amending of findings, goals or policies.

CRITERION (c): Applicable planning goals and guidelines of the State of Oregon.

CITY COUNCIL Response: Satisfied. The proposal is consistent with four (4) of the nineteen (19) applicable statewide planning goals described below:

Goal 1: Citizen Involvement

The proposal is reviewed and noticed according to the requirements for a Type IV-B procedure. Owners of property within the proposed boundary expansion and property owners within two hundred and fifty (250) feet were sent notice of the application. Public notice is posted for both the Historic Building and Sites Commission and City Council hearings in the *Daily Courier* (the local newspaper), on the City of Grants Pass website, www.grantspassoregon.gov and on the first floor of the City Hall building. Such notification provides the public an opportunity to provide written or oral comments on the matter either before or at the hearings.

The City has an acknowledged Citizen Involvement Program adopted under Resolution 1748 that insures the public can actively engage in the planning process.

No comments were received from surrounding property owners during the notice period.

Conclusion: The City's procedures outlined in the *Comprehensive Plan* and *Development Code* pertaining to citizen involvement are being followed. The proposal is consistent with Goal 1 standards and requirements.

Goal 2: Land Use

The Grants Pass *Comprehensive Plan* and *Development Code* outline the planning process to consider a Comprehensive Plan Map Amendment and the Zoning Map Amendment. The process requires the application to be heard by both the Historic Building and Sites Commission and the City Council. The Historic Building and Sites Commission will review the proposal and provide a formal recommendation that will be considered by the City Council for final decision. Specific criteria have been adopted that relate to the proposal. The review bodies will evaluate the proposal against those criteria in order to make a decision.

Conclusion: The application is being reviewed through the City's land use process, making it consistent with the purpose of statewide Goal 2.

Goal 5: Natural Resources, Scenic and Historic Areas, and Open Spaces

The Historic District serves to safeguard the City's historic, aesthetic and cultural heritage and protect areas or features that represent architectural history. The preservation of historic sites lends a sense of place and renovation of historic buildings can be less expensive than to provide equivalent floor area through new construction.

Conclusion: The proposal to expand the historic district serves the purpose of Goal 5 by adding protections to resources within the current district and incorporating resources into the district.

Goal 9: Economic Development

With increased pressure to convert historic sites and areas to new uses, many cities in Oregon are establishing historic districts to protect the culturally significant sites in their communities. Historic Districts protect and enhance the City's attractions and downtown core area. Along with protecting the structures and consideration towards complimenting the existing historic fabric of the downtown core area, Historic Districts also stabilize, and improve, property values for structures within those districts, providing incentives for property owners to maintain and improve their buildings.

Conclusion: The proposal protects and enhances the City's attractions to tourists and visitors, providing support and stimulus to businesses, thus meeting the standards and requirements of Goal 9.

CRITERION (d): Citizen review and comment.

CITY COUNCIL Response: Satisfied. Public notice of the proposal was mailed to properties within the proposed boundary of the expanded Historic District and surrounding properties in accordance with the Comprehensive Plan and Development Code procedures. No comments were received from property owners during the notice period.

CRITERION (e): Review and comment from affected governmental units and other agencies.

CITY COUNCIL Response: Satisfied. Affected governmental units and agencies were notified.

Notice of the proposal was mailed to the Department of Land Conservation and Development (DLCD) on December 23, 2015. No comments were received.

Notice of the proposal was mailed to Josephine County on December 23, 2015, in accordance with the 1998 Intergovernmental Agreement. The County had no comments.

CRITERION (f): A demonstration that any additional need for basic urban services (water, sewer, streets, storm drainage, parks, and fire and police protection) is adequately covered by adopted utility plans and service policies, or a proposal for the requisite changes to said utility plans and service policies as a part of the requested Comprehensive Plan amendment.

CITY COUNCIL Response: Satisfied. Water, sewer, storm, and streets are all present within the proposed Historic District expansion. Therefore, the proposed amendment is in conformance with the Comprehensive Plan.

CRITERION (g): Additional information as required by the review body.

CITY COUNCIL Response: Satisfied. Additional information will be provided upon request of the review body.

CRITERION (h): In lieu of item (b) above, demonstration that the Plan was originally adopted in error.

CITY COUNCIL Response: Not Applicable. There is no indication that the original boundaries were adopted in error.

B. For amendments to the Historic District Special Purpose District Map, Section 4.045 of the City of Grants Pass Development Code requires that all of the following criteria be met:

CRITERION 1: The designation of a District or Landmark serves the purpose of this section.

CITY COUNCIL Response: Satisfied. The Historic District serves to safeguard the City's historic, aesthetic and cultural heritage and protect areas or features that represent architectural history. The proposal to expand the historic district serves the purpose of this section by adding protections to resources within the current district and incorporating resources into the district.

CRITERION 2: The boundaries of a District are adequate and suitable for designation.

CITY COUNCIL Response: Satisfied. The proposed expansion is adequate and suitable for designation to provide additional buffer from non-contributing development that would detract from the historic resources within the district. The expanded district will also incorporate additional historic resources that are located outside of the existing district that will benefit from the same protections as the local Landmarks and structures within the existing historic district.

CRITERION 3: Consideration of the positive and negative effects of the designation upon residents, businesses, or property owners of the area.

CITY COUNCIL Response: Satisfied. The proposed expansion has considered the positive and negative effects of the designation. Expansion of the district will require historic review for modifications to structures within the district boundary. Historic review will only apply to exterior modifications and not affect the allowable uses of the property, as determined by the underlying zoning district. As part of the proposed expansion, the HBSC recently developed design guidelines for local historic landmark structures and structures within the historic district. The design guidelines will provide administrative review and approval for exterior improvements that conform to the design guidelines.

C. The text of the Development Code may be recommended for amendment and amended provided that all of the following criteria of Section 4.103 of the Development Code are met.

CRITERION 1: The proposed amendment is consistent with the purpose of the subject section and article.

CITY COUNCIL Response: Satisfied. The proposed amendment designates the Historic District on the Zoning Overlay Map. The amendment is consistent with the purpose of Article 13 and the other Special Purpose Districts recognized by the Development Code.

CRITERION 2: The proposed amendment is consistent with other provisions of this code.

CITY COUNCIL Response: Satisfied. The proposed text amendment is consistent with the other provisions of the Code and the underlying zoning will remain in place for the properties within the Historic District.

CRITERION 3: The proposed amendment is consistent with the goals and policies of the Comprehensive Plan, and most effectively carries out those goals and policies of all alternatives considered.

CITY COUNCIL Response: Satisfied. The proposed changes are consistent with Element 13, Land Use, of the Comprehensive Plan. The Development Code includes a Zoning Overlay Map that includes a Historic Special Purpose District Map that delineates areas of historic value to the community.

Most Effective Alternative

The alternative to approving the proposal is to retain the existing description of the Historic District. The existing description is not consistent with the proposed expansion and would require amendment to match the proposed boundary. The proposed amendment designates the Historic District on the Zoning Overlay Map and more effectively carries out the goals and policies stated above.

CRITERION 4: The proposed amendment is consistent with the functions, capacities, and performance standards of transportation facilities identified in the Master Transportation Plan.

CITY COUNCIL Response: Satisfied. The proposed amendment is not expected to affect the functions, capacities, or performance standards of transportation facilities identified in the Master Transportation Plan (MTP).

VIII. DECISION AND SUMMARY:

The City Council **APPROVED** the Comprehensive Plan Map Amendment and Zoning Map Amendment to expand the Historic Special Purpose District.

The vote was 8-0 with Councilors DeYoung, Lindsay, Lovelace, Riker, Hannum, Roler, Bouteller and Goodwin in favor and none opposed.

IX. FINDINGS APPROVED AND DECISION ADOPTED BY THE GRANTS PASS CITY COUNCIL this 20th day of April, 2016.

_____

Darin Fowler, Mayor

NOTE: *The amendment is legislative and is not subject to the 120-day requirement.*

CITY OF GRANTS PASS
PARKS & COMMUNITY DEVELOPMENT DEPARTMENT

DEVELOPMENT CODE TEXT AMENDMENT
SLOPE HAZARD DISTRICT
ARTICLE 13 ~ SPECIAL PURPOSE DISTRICTS
ARTICLE 18 ~ PUD & ALTERNATIVE DEVELOPMENT OPTIONS

FINDINGS OF FACT – CITY COUNCIL DECISION

Procedure Type:	Type IV: Planning Commission Recommendation and City Council Decision
Project Number:	405-00005-15
Project Type:	Development Code Text Amendment
Applicant:	City of Grants Pass
Planner Assigned:	Joe Slaughter
Application Received:	December 30, 2015
Application Complete:	January 8, 2016
Date of Staff Report:	February 16, 2016
Date of UAPC Hearing:	February 24, 2016
Date of UAPC Findings:	February 24, 2016
Date of Council Staff Report:	March 29, 2016
Date of Council Hearing:	April 6, 2016
Date of City Council Findings:	April 20, 2016

I. PROPOSAL:

A Development Code Text Amendment

To Article 13:

- Clarifying that the Slope Hazard District includes all properties, or portions of properties that have slopes exceeding 15%;
- Requiring existing lots and parcels within the Slope Hazard District to provide a Steep Slope Development Report if one was not provided when the lot or parcel was created;
- Reorganizing Section 13.140(5) to clarify the requirements for erosion control measures; and
- Completing general housekeeping of Article 13 to insure the formatting is consistent throughout the Development Code.

To Article 18:

- Making clear that PUD development in the Slope Hazard District, like subdivisions and land partitions, must meet the Slope Hazard District requirements of Article 13.

(See Exhibit 'A' to Ordinance for final, adopted version

II. AUTHORITY AND CRITERIA:

Section 4.102 of the City of Grants Pass Development Code provides that the Director, Planning Commission or City Council may initiate a text amendment. The amendment has been initiated by the Director.

Section 2.062 authorizes the Planning Commission to make a recommendation to the City Council and authorize the City Council to make a final decision on an application for a Development Code Text Amendment, pursuant to the requirements of a Type IV procedure.

The text of the Development Code may be recommended for amendment and amended provided the criteria in Section 4.103 of the Development Code are met.

III. APPEAL PROCEDURE:

The City Council's final decision may be appealed to the State Land Use Board of Appeals (LUBA) as provided in state statutes. A notice of intent to appeal must be filed with LUBA within 21 days of the Council's written decision.

IV. PROCEDURE:

A. The application was received on December 30, 2015 and deemed complete on January 8, 2016. The application was processed in accordance with Section 2.062 of the Development Code.

B. Notice of the proposed amendment and the public hearings was sent to the Oregon Department of Land Conservation and Development on January 10, 2016 in accordance with ORS 197.610 and OAR Chapter 660, Division 18.

C. Notice of the proposed amendment and the public hearings was sent to Josephine County on January 10, 2016 in accordance with the 1998 Intergovernmental Agreement.

D. Public notice of the February 24, 2016 Planning Commission public hearing was published in the newspaper on February 17, 2016 in accordance with Sections 2.053 and 2.063 of the Development Code.

E. The Planning Commission held a public hearing on February 24, 2016 to consider the proposal and make a recommendation to the City Council.

F. Public notice of the proposal and the April 6, 2016 City Council public hearing was posted on March 30, 2016.

G. The City Council held a public hearing on April 6, 2016 to consider the proposal and recommendation and make a decision. The vote on the first and second readings of the Ordinance were unanimous (8-0), in favor, and the ordinance was approved at the April 6, 2016 meeting.

V. SUMMARY OF EVIDENCE:

A. The basic facts and criteria regarding this application are contained in the staff report and its exhibits attached as Exhibit "A" and incorporated herein.

1. Updated mark-up text for:

   a. Sections 13.010-13.150,13.332 & 13.631

   b. Sections 18.050-18.051

2. Planning Commission Findings of Fact and the Attached Record

   a. Planning Commission Staff Report and Exhibits

      i. Mark-up Sections 13.010-13.150, 13.631, &18.050-18.051

   b. Minutes of the February 24, 2016 Planning Commission Hearing

   c. PowerPoint Presentation from February 24, 2016 Planning Commission Hearing

B. The minutes of the public hearing held by the City Council on April 6, 2016, which are attached as Exhibit "B", summarize the oral testimony presented and are hereby adopted and incorporated herein.

C. The PowerPoint presentation provided by staff at the April 6, 2016 public hearing is attached as Exhibit "C" and incorporated herein.

VI. GENERAL FINDINGS:

Article 13 – Special Purpose Districts – provides standards that facilitate development within areas with specific natural, historical, or locational features while helping to mitigate natural hazards, protect natural and historical features, and mitigate land use conflict. The Slope Hazard District is one of the Special Purpose Districts in Article 13. As currently written, the Development Code defines the Slope Hazard District as properties, or portions of properties, that contain slopes of at least 15% and depicted as Slope Hazard on the Special Purpose District Map. There is no adopted overlay map for the Slope Hazard District. Rather, staff uses available topographic information to determine areas where slopes likely exceed 15%. This portion of the purposed text amendment would cause the Development Code language to match existing procedures in the absence of an adopted Slope Hazard District overlay map.

To help mitigate hazards and negative effects associated with development, development within the Slope Hazard District requires a two-step process:

1. A Steep Slope Development Report; and
2. Grading and Erosion Control Plans

As the Development Code is currently written, only the grading and erosion control plans are required for building permits on existing lots and parcels. There is no consideration for whether a steep slope development report has been submitted for these existing lots

or parcels. In order to insure that hazards associated with steep slopes development have been adequately considered and addressed, it is important that a steep slopes development report is submitted and reviewed for all lots and parcels in the Slope Hazard District.

The remainder of the proposed changes to Article 13 can be described as housekeeping in nature. These changes are being made to insure that formatting is consistent throughout the Development Code.

The purposed text amendments also include a small change to Article 18 – Planned Unit Development (PUD) & Alternative Development Options. Subdivisions and land partitions that include properties in the Slope Hazard District are required to address the development standards of Article 13. It is not clear currently, whether PUD development is required to address those same standards. This portion of the purposed text amendment would make it clear that PUD development in the Slope Hazard District must meet all of the same standards.

VII. FINDINGS IN CONFORMANCE WITH APPLICABLE CRITERIA:

The text of the Development Code may be recommended for amendment and amended provided that all of the following criteria of Section 4.103 of the Development Code are met.

CRITERION 1: The proposed amendment is consistent with the purpose of the subject section and article.

Response: Satisfied. The purpose of Article 13 – Special Purpose Districts – is to provide standards that facilitate development within areas with specific natural, historical, or locational features while helping to mitigate natural hazards, protect natural and historical features, and mitigate land use conflict. Without the proposed changes to Article 13 the Slope Hazard District will not function as intended to protect natural features and mitigate natural hazards. The purposed changes will cause the Slope Hazard District to be administered in a manner consistent with the stated purpose of Article 13. The purposed changes will also help to insure that the standards of the Slope Hazard District are uniformly applied to all types of development.

CRITERION 2: The proposed amendment is consistent with other provisions of this code.

Response: Satisfied. The proposed changes will cause the Slope Hazard District to be administered in a manner consistent with other Special Purpose Districts. They will also insure that the standards of the Slope Hazard District are uniformly applied to all types of development.

CRITERION 3: The proposed amendment is consistent with the goals and policies of the Comprehensive Plan, and most effectively carries out those goals and policies of all alternatives considered.

Response: Satisfied. The proposed changes are consistent with Element 4–Environmental Resources Quality, Element 5–Natural Hazards, and Element 13–Land Use, of the Comprehensive Plan. Without the proposed changes to Article 13, the Slope

Hazard District will not function as intended to protect natural features and mitigate natural hazards. The proposed changes will cause the Slope Hazard District to be administered in a manner consistent with the Comprehensive Plan. The proposed amendments will cause the standards of the Slope Hazard District to be applied uniformly to all types of development and will clear up any ambiguity concerning development in the Slope Hazard District.

Most Effective Alternative

The alternative to approving the proposal is to adopt a Slope Hazard District overlay map. The adoption of an up-to-date, official Slope Hazard District map is the best long-term course of action for defining and administering the Slope Hazard District. However, the creation and adoption of this map will take time. In the meantime the proposed text amendment will allow the City to continue to administer the Slope Hazard District in a manner consistent with the Comprehensive Plan and the Development Code in the absence of an adopted Slope Hazard District overlay map.

CRITERION 4: The proposed amendment is consistent with the functions, capacities, and performance standards of transportation facilities identified in the Master Transportation Plan.

Response: Satisfied. The proposed amendment is not expected to affect the functions, capacities, or performance standards of transportation facilities identified in the Master Transportation Plan (MTP).

VIII. DECISION AND SUMMARY:

Based on the above findings, the City Council found the applicable criteria were satisfied and **APPROVED** the proposed Development Code text amendment as presented in Exhibit "A" to the Ordinance.

The vote was 8-0 with Councilors Bouteller, DeYoung, Goodwin, Hannum, Lindsay, Lovelace, Riker and Roler in favor.

IX. FINDINGS APPROVED AND DECISION ADOPTED BY THE GRANTS PASS CITY COUNCIL this 20th day of April, 2016.

_____

Darin Fowler, Mayor

NOTE: *The amendment is legislative and is not subject to the 120-day requirement.*

City Council Meeting
April 6, 2016
6:00 pm
City Council Chambers

The Council of the City of Grants Pass met in regular session on the above date with Mayor Fowler presiding. The following Councilors were present: Bouteller, DeYoung, Goodwin, Hannum, Lindsay, Lovelace, Riker, Roler. Also present and representing the City were City Manager Cubic, Assistant City Manager Reeves, Finance Director Meredith, Public Safety Director Landis, Parks & Community Development Director Glover, Public Works Director Canady, City Attorney Mark Bartholomew, and City Recorder Frerk.

Mayor Fowler opened the meeting and Councilor Lindsay led the invocation followed by the Pledge of Allegiance.

Proclamation: Sexual Assault Awareness Month

1. PUBLIC COMMENT:

2. PUBLIC HEARING:

Legislative

a. Ordinance amending Article 13 and Article 18 regarding development in the Steep Slope Hazard District.

ORDINANCE NO. 16-5675

Councilor Riker moved that the ordinance be read for the first reading, title only. The motion was seconded by Councilor Lindsay. The vote resulted as follows: "Ayes": Bouteller, DeYoung, Goodwin, Hannum, Lindsay, Lovelace, Riker and Roler. "Nays": None. Abstain: None. Absent: None. The motion passed. The ordinance is read.

Councilor Lovelace moved that the ordinance be read by title only, second reading. The motion was seconded by Councilor Lindsay. The vote resulted as follows: "Ayes": Bouteller, DeYoung, Goodwin, Hannum, Lindsay, Lovelace, Riker and Roler. "Nays": None. Abstain: None. Absent: None. The motion passed. The ordinance is read.

Councilor Lindsay moved that the ordinance be adopted. The motion was seconded by Councilor Lovelace. Mayor Fowler asked if the ordinance should be adopted, signified by roll call vote as follows: Bouteller – yes, DeYoung – yes, Goodwin – yes, Hannum – yes, Lindsay – yes, Lovelace – yes, Riker – yes, Roler – yes. The ordinance was adopted.

b. Ordinance amending Article 13 Special Purpose Districts to designate the Historic District Overlay on the Zoning District Map and to expand the Historic Special Purpose District.

ORDINANCE NO. 16-5676

Councilor Lovelace moved that the ordinance be read for the first reading, title only. The motion was seconded by Councilor Bouteller. The vote resulted as follows: "Ayes": Bouteller, DeYoung, Goodwin, Hannum, Lindsay, Lovelace, Riker and Roler. "Nays": None. Abstain: None. Absent: None. The motion passed. The ordinance is read.

Councilor Roler moved that the ordinance be read by title only, second reading. The motion was seconded by Councilor Hannum. The vote resulted as follows: "Ayes": Bouteller, DeYoung, Goodwin, Hannum, Lindsay, Lovelace, Riker and Roler. "Nays": None. Abstain: None. Absent: None. The motion passed. The ordinance is read.

Councilor DeYoung moved that the ordinance be adopted. The motion was seconded by Councilor Lindsay. Mayor Fowler asked if the ordinance should be adopted, signified by roll call vote as follows: Bouteller – yes, DeYoung – yes, Goodwin – yes, Hannum – yes, Lindsay – yes, Lovelace – yes, Riker – yes, Roler – yes. The ordinance was adopted.

3. CONSENT AGENDA:

a. Resolution adopting parking lot wayfinding signage.

RESOLUTION NO. 16-6409

Councilor DeYoung moved and Councilor Lovelace seconded that Resolution 16-6409 be adopted and the vote resulted as follows: "Ayes": Bouteller, DeYoung, Goodwin, Hannum, Lindsay, Lovelace, Riker and Roler. "Nays": None. Abstain: None. Absent: None. The resolution is adopted.

b. Resolution amending the Wastewater Pump Zone fee schedule.

RESOLUTION NO. 16-6410

Councilor DeYoung moved and Councilor Lovelace seconded that Resolution 16-6410 be adopted and the vote resulted as follows: "Ayes": Bouteller, DeYoung, Goodwin, Hannum, Lindsay, Lovelace, Riker and Roler. "Nays": None. Abstain: None. Absent: None. The resolution is adopted.

c. Resolution establishing the interest rate to be applied during calendar year 2016 to deferred development agreement monies on deposit.

RESOLUTION NO. 16-6411

Councilor DeYoung moved and Councilor Lovelace seconded that Resolution 16-6411 be adopted and the vote resulted as follows: "Ayes": Bouteller, DeYoung, Goodwin, Hannum, Lindsay, Lovelace, Riker and Roler. "Nays": None. Abstain: None. Absent: None. The resolution is adopted.

d. Motion allowing night work for the replacement of an ODOT reader board on Highway 199.

Councilor DeYoung moved and Councilor Lovelace seconded to allow night work for the replacement of an ODOT reader board on Highway 199 and the vote resulted as follows: "Ayes": Bouteller, DeYoung, Goodwin, Hannum, Lindsay, Lovelace, Riker and Roler. "Nays": None. Abstain: None. Absent: None. The motion passed.

e. Motion acknowledging the receipt of the monthly financial reports for January and February 2016.

Councilor DeYoung moved and Councilor Lovelace seconded to acknowledge receipt of the monthly financial reports for January and February 2016 and the vote resulted as follows: "Ayes": Bouteller, DeYoung, Goodwin, Hannum, Lindsay, Lovelace, Riker and Roler. "Nays": None. Abstain: None. Absent: None. The motion passed.

f. Motion approving the Development Code Text Amendment Historic District Design Guidelines Article 13 Special Purpose Districts Findings of Fact.

Councilor DeYoung moved and Councilor Lovelace seconded to approve the Development Code Text Amendment Historic District Design Guidelines Article 13 Special Purpose Districts Findings of Fact and the vote resulted as follows: "Ayes": Bouteller, DeYoung, Goodwin, Hannum, Lindsay, Lovelace, Riker and Roler. "Nays": None. Abstain: None. Absent: None. The motion passed.

g. Motion approving the minutes of the City Council Meeting of March 16, 2016.

Councilor DeYoung moved and Councilor Lovelace seconded that the minutes of the City Council meeting of March 16, 2016 be approved and the vote resulted as follows: "Ayes": Bouteller, DeYoung, Goodwin, Hannum, Lindsay, Lovelace, Riker and Roler. "Nays": None. Abstain: None. Absent: None. The motion passed.

h. Motion acknowledging the minutes of the Urban Area Planning Commission meeting of January 13, 2016.

Councilor DeYoung moved and Councilor Lovelace seconded that the minutes of the Urban Area Planning Commission meeting of January 13, 2016 be approved and the vote resulted as follows: "Ayes": Bouteller, DeYoung, Goodwin, Hannum, Lindsay, Lovelace, Riker and Roler. "Nays": None. Abstain: None. Absent: None. The motion passed.

i. Motion acknowledging the minutes of the Urban Area Planning Commission meeting of January 27, 2016.

Councilor DeYoung moved and Councilor Lovelace seconded that the minutes of the Urban Area Planning Commission meeting of January 27, 2016 be approved and the vote resulted as follows: "Ayes": Bouteller, DeYoung, Goodwin, Hannum, Lindsay, Lovelace, Riker and Roler. "Nays": None. Abstain: None. Absent: None. The motion passed.

j. Motion acknowledging the minutes of the Urban Area Planning Commission meeting of February 24, 2016.

Councilor DeYoung moved and Councilor Lovelace seconded that the minutes of the Urban Area Planning Commission meeting of February 24, 2016 be approved and the vote resulted as follows: "Ayes": Bouteller, DeYoung, Goodwin, Hannum, Lindsay, Lovelace, Riker and Roler. "Nays": None. Abstain: None. Absent: None. The motion passed.

k. Motion acknowledging the minutes of the Bikeways and Walkways Committee meeting of January 12, 2016.

Councilor DeYoung moved and Councilor Lovelace seconded that the minutes of the Bikeways and Walkways Committee meeting of January 12, 2016 be approved and the vote resulted as follows: "Ayes": Bouteller, DeYoung, Goodwin, Hannum, Lindsay, Lovelace, Riker and Roler. "Nays": None. Abstain: None. Absent: None. The motion passed.

l. Motion acknowledging the minutes of the Bikeways and Walkways Committee meeting of February 9, 2016.

Councilor DeYoung moved and Councilor Lovelace seconded that the minutes of the Urban Area Planning Commission meeting of February 24, 2016 be approved and the vote resulted as follows: "Ayes": Bouteller, DeYoung, Goodwin, Hannum, Lindsay, Lovelace, Riker and Roler. "Nays": None. Abstain: None. Absent: None. The motion passed.

m. Motion acknowledging the minutes of the Urban Tree Advisory Committee meeting of January 12, 2016.

Councilor DeYoung moved and Councilor Lovelace seconded that the minutes of the Urban Area Planning Commission meeting of February 24, 2016 be approved and the vote resulted as follows: "Ayes": Bouteller, DeYoung, Goodwin, Hannum, Lindsay, Lovelace, Riker and Roler. "Nays": None. Abstain: None. Absent: None. The motion passed.

n. Motion acknowledging the minutes of the Urban Tree Advisory Committee meeting of February 8, 2016.

Councilor DeYoung moved and Councilor Lovelace seconded that the minutes of the Urban Area Planning Commission meeting of February 24, 2016 be approved and the vote resulted as follows: "Ayes": Bouteller, DeYoung, Goodwin, Hannum, Lindsay, Lovelace, Riker and Roler. "Nays": None. Abstain: None. Absent: None. The motion passed.

o. Motion acknowledging the minutes of the Parks Advisory Board meeting of February 11, 2016.

Councilor DeYoung moved and Councilor Lovelace seconded that the minutes of the Urban Area Planning Commission meeting of February 24, 2016 be approved and the vote resulted as follows: "Ayes": Bouteller, DeYoung, Goodwin, Hannum, Lindsay, Lovelace, Riker and Roler. "Nays": None. Abstain: None. Absent: None. The motion passed.

4. COUNCIL ACTION:

   a. Resolution adopting branding for the City of Grants Pass.

RESOLUTION NO. 16-6412

Councilor Goodwin moved and Councilor Lindsay seconded to adopt Resolution 16-6412 and the vote resulted as follows: "Ayes": DeYoung, Goodwin, Lindsay, Lovelace and Riker. "Nays": Bouteller, Hannum and Roler. Abstain: None. Absent: None. The resolution is adopted.

   b. Resolution amending the procedures for conduct of business, Section 8 Meeting Dates.

Councilor DeYoung moved and Councilor Lovelace seconded to continue the issue of procedures for conduct of business, Section 8 Meeting Dates, to the April 20, 2016, meeting and the vote resulted as follows: "Ayes": Bouteller, DeYoung, Goodwin, Hannum, Lindsay, Lovelace, Riker and Roler. "Nays": None. Abstain: None. Absent: None. The motion passed.

5. MATTERS FROM MAYOR, COUNCIL AND STAFF:

   a. Appoint two members to the Tourism Advisory Committee.

Councilor Lindsay moved and Councilor Goodwin seconded to appoint Robert Hamlyn and Barbara Hochberg to the Tourism Advisory Committee and the vote resulted as follows: "Ayes": Bouteller, DeYoung, Goodwin, Hannum, Lindsay, Lovelace, Riker and Roler. "Nays": None. Abstain: None. Absent: None. The motion passed.

   b. Committee Liaison reports.

6. EXECUTIVE SESSION: None

7. ADJOURN:

There being no further business to come before the Council, Mayor Fowler adjourned the meeting at 8:47 p.m.

The ordinances, resolutions and motions contained herein and the accompanying votes have been verified by:

_____
City Recorder

GRANTS PASS URBAN TREE ADVISORY COMMITTEE
Meeting Minutes – March 14, 2016 at 7:00 PM
Courtyard Conference Room

Committee Members:
Dave Russell (Chair)
James Love (Vice Chair)
Stormy Ballenger - Absent
Dan McBerty – Arrived late
William Reinert
Clifford Ostermeier
Michael Holzinger
Willow Burnett-DePew - Absent

City/Staff/Council Liaisons:
Steve Radda (Parks)
Dan DeYoung (City Council)

Guests:

I. Business - Continuing

A. Approval of Minutes from January 12, 2016 and February 8, 2016.

MOTION/VOTE

Committee Member Love moved and Committee Member Holzinger seconded the motion to approve the minutes from the February 8, 2016 meeting with the amendment to attach the list of tree nominations. The vote resulted as follows: "AYES": Committee Members Love, Reinert, Ostermeier, and Holzinger. "NAYS": None. Abstain: Russell. Absent: Ballenger, McBerty, Burnett-DePew. The motion passed.

A motion for the January 12, 2016 minutes was not put forward.

II. Business - New

A. Announcements

- One group from out of state purchased 8 Memorial trees. It was expressed that there will be flexibility for time frame to plant these trees to accommodate the groups from out of town.
- Councilor DeYoung cautioned that the tree committee should be mindful of the renovations to happen at Riverside when the trees are placed. It would be a shame to have to transplant them in the future.
- The current proposed locations for the trees are between the centennial gazebo and the softball field.

B. Event Calendar Review

- The question of having a booth at growers market was brought up. The committee would like to add a footnote to bring this up at the next meeting with Stormy. She had suggested possibly having some of the local high school students volunteer.
- Footnote to talk about spring tree walk next meeting. Possibly location would be Reinhart Park, Lawnridge area neighborhood, Croxton Park, etc. To be held on the weekend before or after Mother's Day.

C. Updates

- The majority of the new trees have been planted in parks. There will be about 55 trees total planted.
- Member McBerty had requested to get the tree committee out into the community. There was a section in the Park's Recreation Guide with a small version of tree map with tree names and numbers.
- This Guide goes out to all elementary kids and therefore their families.
- District Seven is supposed to get back to Jeff about whether they want the 10 trees offered for Arbor Day.
- Footnote to ask Stormy if she's recruiting students.
- Councilor DeYoung let it be known that we have already met the DEQ standards to reduce greenhouse emissions by 2025.
- Discussion about the current tree codes in the development code and what the committee would really want it to reflect.

D. Discuss Arbor Day Event

- Will be held on April 4th at Redwood Park at 1:00pm. There will be a Dawn Redwood planted.
- Four people from the committee confirmed they will attend.

E. Nominations for Significant Tree or Landscape

- None.

F. Comments

- Jeff will get the deadline for next recreation guide. It was suggested to add a blub about when to prune, etc.
- Jules requested a list or map of Heritage Trees, Significant Trees, and Memorial Trees.
- Member Holzinger will email Jules the map he put together.
- Heritage trees are state issued and Jules will need to contact them.
- Significant trees will be awarded on Arbor Day.
- Jeff will be requesting a CSO to go out for the trees cut without permit on 750 NW 4th St.

MOTION/VOTE

Committee Member Russell moved and Committee Member Holzinger seconded the motion to adjourn the meeting. The vote resulted as follows: "AYES": Committee Members Love, Reinert, Ostermeier, McBerty, and Holzinger. "NAYS": None. Abstain: None. Absent: Ballenger and Burnett-DePew. The motion passed.

Next Meeting: April 11, 2016

These minutes were prepared by Carlie Paulsen, Administration Department, City of Grants Pass.

BIKEWAYS AND WALKWAYS COMMITTEE
Meeting Minutes – March 8, 2016 at 12:00 PM
Courtyard Conference Room

Member Attendance:
Joel Peterson (Chair)
Paul Hart (Vice Chair) - Absent
Ken Behymer - Absent
Chip Dennerlein - Absent
Larry Turpen - Absent
Cliff Kuhlman
Mark Lansing
Leslie Orr
Mark Acosta
Dana Christensen - Absent

City/Staff/Council Liaisons:
Fred Saunders (PCD Senior Planner)
Rob Brandes (JoCo Public Works)
Dan Dorrell (ODOT)
Valerie Lovelace (City Council)
Keith Heck (County Commissioner) - Absent
Ed Burke (Public Safety)

Guests:

I. Business – Continuing

A. Approval of Minutes – February 9, 2016

MOTION/VOTE
Committee Member Orr moved and Committee Member Kuhlman seconded the motion to approve the minutes from the February 9, 2016 meeting as presented. The vote resulted as follows: "AYES": Committee Members Peterson, Kuhlman, Orr, Acosta, and Lansing. "NAYS": None. Abstain: None. Absent: Committee Members Hart, Turpen, Behymer, Dennerlein, and Christensen. The motion passed.

B. Updates From Staff/Liaison and questions for Staff/Liaison

1. City

- Repairs on the Allen Creek Trail by Allendale School will be done during spring break to coincide with work that the school will be doing. The cottonwood trees roots bumped up and there will need to be a more permanent fix done, Streets was able to grind the roots down which helped a little.
- The plan is to repair some sections and remove some of the cottonwood trees.
- It was asked if the City had tried any of the experimental surfaces. Not at this time, the plan is to try in the future with a root barrier. Some experimental surfaces have been used and are working well Baker Park, however it is very expensive.
- Money is being set aside for maintenance on the trail, little bit more each year.
- Red Robin is moving forward. The City is updating the easements for bridge and two creek crossings, finishing the paths at Red Robin which connects to

the path at Allen Creek Ranch PUD, to Coulson, to Allendale School, and so on and so forth.

- Sidewalk project on Rogue River Ave is in the hands of the engineer. There will be a curb relocation to accommodate right of way constraints. The plan is to bid this spring and build it this summer.
- A committee member asked about 7th and M St – Fred said that they will be not be cutting the concrete out but were planning on striping a bikeway around it to draw attention to it for the riders.
- The City started on Lincoln Rd and there will be sidewalks clear from Bridge St. to the All Sports Park. The ODOT permits came through.

2. County

- The slide on Galice Rd hasn't moved in a week so fingers crossed that it won't continue to worsen. Slide is at mile post 13, the road is down to a single lane. Jersey barriers were put up.
- Working on budget, the big one of interest is the Allen Creek Project. Demolition on the houses starts next week. The plan is to keep the bike path open with construction flagging.
- The Fairgrounds are trying to hammer something out with the BMX folks.
- Budgeting for south middle school sidewalks. They want to start on that when school lets out.
- Clean up mode from weather.
- A committee member mentioned that the new BLM map shows the access area from Cathedral Hills to Williams Hwy. It previously was blocked off with private property signs but the landowner had to remove them.

3. ODOT

- The bikeway on Redwood Hwy in front of Haggen and McDonald's is getting bumpy and could use some repairs.
- The intersection at Merlin-Galice and Monument will need to be widened to meet truck turning templates, there will likely be junction boxes added to make it wide enough for trucks.
- Putting programmable heads at Highland.
- Caveman bridge will be all night work.

4. Public Safety

- Public Safety went to a pedestrian safety conference. Received information and training to give to agencies about cross walk enforcement grants.
- ODOT crash stats show that crashes are more heavily pedestrian fault rather than driver.
- Public Safety will work on more pedestrian enforcement.
- Valerie asked about getting curriculum for teaching kids at the end of the school year.

II. Business – New

- Email from Lisa Fogelquist, the secretary from Redwood Elementary inviting bikeways to an end of year fair for community outreach. The committee would like to attend and possible pass out helmets.

- Fair is on June 2nd. Bring bike maps with family rides and other pamphlets. Will need to see about getting more pamphlets.
- Ride the Rogue is cancelled. Possibly due to Cycle Oregon being in the area and people not stepping up for the key functions needed.
- Need to look into options to fund the Greenway as Ride the Rogue was going to help provide funding.
- Pedalsnpears.org

Next meeting date: April 12, 2016 at 12:00 pm in the Courtyard Conference Room

These minutes were prepared by Carlie Paulsen, Administration Department, City of Grants Pass.

Item: Ordinance amending the Grants Pass Municipal Code by adding Chapter 4.21 Social Gaming. Date: April 20, 2016

SUBJECT AND SUMMARY:

The proposal is to permit "Social Gaming," as that term is defined in ORS 167.117(21).

RELATIONSHIP TO COUNCIL GOALS:

This supports Council's goal of **ENCOURAGING ECONOMIC OPPORTUNITIES** by making a new business model available.

CALL TO ACTION SCHEDULE:

Call to action schedule: No statutory timeline required.

BACKGROUND:

A local attorney approached City staff on behalf of his client. The attorney inquired as to whether social gaming was permitted in the City. The City Attorney determined that, for social gaming to be permitted at a business in the City, the Council must expressly authorize it. In response, the attorney submitted a proposed ordinance for review.

Social gaming is defined as:

"(a) A game, other than a lottery, between players in a private home where no house player, house bank or house odds exist and there is no house income from the operation of the social game; and
(b) If authorized pursuant to ORS 167.121, a game, other than a lottery, between players in a private business, private club or place of public accommodation where no house player, house bank or house odds exist and there is no house income from the operation of the social game."

ORS 167.121 states: "Counties and cities may, by ordinance, authorize the playing or conducting of a social game in a private business, private club or in a place of public accommodation. Such ordinances may provide for regulation or licensing of the social games authorized."

COST IMPLICATION:

Staff time would be required to process social gaming licenses and additional business licenses. The license fees would offset the staff cost to an unknown extent.

Staff Report (continued):

ALTERNATIVES:

There are two ordinances before you. One ordinance prohibits those under 18 from entering the business establishment where social games are played. The other simply prohibits those under 18 from participating in social games (which would be against the law anyhow). The significance is that if those under 18 are prohibited from entering the establishment altogether, then the business falls under the adult use overlay, limiting potential locations.

Other alternatives include modification of either of the two proposed ordinances and not adopting an ordinance.

RECOMMENDED ACTION:

Staff does not have a recommended action.

POTENTIAL MOTION:

I move to adopt the ordinance amending the Municipal Code by adding Chapter 4.21 Social Gaming.

ORDINANCE NO.

AN ORDINANCE OF THE COUNCIL OF THE CITY OF GRANTS PASS AMENDING THE GRANTS PASS MUNICIPAL CODE BY ADDING CHAPTER 4.21 SOCIAL GAMING.

WHEREAS:

1. The City Council finds that it is in the economic and recreational interest of the citizens of Grants Pass to permit social gaming; and

2. Social gaming is permitted in a private club, place of public accommodation, or business, as long as the City expressly permits it pursuant to ORS 167.121; and

3. The City Council finds that those under 18 should not be permitted to enter a premises licensed for social gaming.

NOW, THEREFORE, THE CITY OF GRANTS PASS HEREBY ORDAINS: The Grants Pass Municipal Code is hereby amended to add a new chapter 4.21 as set forth in Exhibit "A."

ADOPTED by the Council of the City of Grants Pass, Oregon, in regular session this 20th day April 2016 with the following specific roll call vote:

AYES:

NAYS: **ABSTAIN:** **ABSENT:**

SUBMITTED to and _____ by the Mayor of the City of Grants Pass, Oregon, this ____ day of April 2016.

_____
Darin Fowler, Mayor

ATTEST:

_____ Date submitted to Mayor: _____
Karen Frerk, City Recorder

Approved as to Form, Mark Bartholomew, City Attorney _____

Exhibit A

Chapter 4.21
Social Gaming

Sections:

4.21.000 Title, Legislative Authority and Purpose
4.21.010 Social Games Permitted
4.21.020 Definitions
4.21.030 License Required for Social Games
4.21.040 Application for License and Investigation
4.21.041 Application Requirements
4.21.042 Application Renewal
4.21.050 License Fee
4.21.060 Standards for Issuance of License
4.21.070 License Not Transferable
4.21.080 Responsibilities of Licensee
4.21.081 Tournament Format Required
4.21.090 Terms of License
4.21.100 Revocation of License
4.21.110 Suspension of License
4.21.120 Penalties
4.21.130 Savings Clause
4.21.140 Periodic Review Date

4.21.000 Title, Legislative Authority and Purpose

These regulations shall be known as the "City of Grants Pass Social Gaming Code" and may be cited as such. ORS 167.180, et seq. defines gambling and provides for the regulation of gambling in the State of Oregon. Pursuant to ORS 167.117(7) “gambling” does not include “social games.” ORS 167.121 provides that counties and cities may, by ordinance, authorize the playing or conducting of Social Games in a private business, private club, or in a place of public accommodation. Such ordinances may provide for regulation or licensing of the authorized Social Games. The purpose of this ordinance is to authorize and regulate, in accordance with Oregon state law, the playing or conducting of Social Games. It is not the purpose of this ordinance and this ordinance is not intended to regulate any form of gambling or gaming authorized and regulated under Oregon state law other than Social Gaming as specifically defined in this ordinance.

4.21.010 Social Games Permitted

Social games, other than a lottery, between players in a private business, private club or in a place of public accommodation where no house player, house bank

or house odds exist and there is no house take (meaning no house income from the operation of the social game), are hereby permitted as provided herein.

4.21.020 Definitions

Unless the context requires otherwise, all terms set forth in this Ordinance shall have the same meaning as set forth in ORS 167.117.

"Person" and "Persons" means any individual, firm, partnership, corporation, joint venture, association, social club, fraternal organization, fraternity, sorority, non-profit organization, estate, trust, business trust, receiver, trustee, syndicate or any other group, organization or combination acting as a unit.

"Social Game" and "Social Gaming" means a game, other than a lottery, between players at a Special Event held in a private business or place of public accommodation where no house player, house bank or house odds exist and there is no house income from the operation of the Social Game.

4.21.030 License Required for Social Games

Any person(s), business, private club, non-profit organization or place of public accommodation desiring to permit patrons or invitees to engage in any social game within the City of Grants Pass shall acquire and maintain a valid license from the City. Licenses shall be granted only upon application to the City and upon approval by the City Manager.

4.21.040 Application for License And Investigation

An applicant shall submit an application in a form approved by the City Manager.

4.21.041 Application Requirements

Before a license for social gaming may be granted by the City Manager, an applicant must submit an application for a license to the City Manager with the following information and allow an investigation to be made thereon. A completed application form must include the true names, dates of birth, social security numbers and addresses of all persons financially interested in the business and/or all persons who are either on the board of directors of or hold offices in the entity or organization. The term "persons financially interested in the business" shall include all persons who share in the profits of the business where the social gaming activity is located, on the basis of gross or net revenue, including landlords, lessors, lessees, and the owners of the building, fixtures or equipment used in the social game. The application shall also include the names, dates of birth, social security numbers and addresses of all tournament sponsors if different from persons financially interested in the business.

4.21.042 Application Renewal

The grantee of a social gaming license must notify the City Manager within 10 days of any change in persons financially interested in the business or in the names of any persons who are either on the board of directors of or hold offices in the entity or organization and request a renewal of its license. At the time of such request, the applicant shall submit the information required by Section 4.21.041.

4.21.050 License Fee

For each business or other entity or organization licensed, an annual fee shall be required, to be set by resolution of the City Council.

4.21.060 Standards For Issuance of License

The City Manager shall either approve the application and grant the license applied for, or deny the application and refuse to grant the license. The license shall not be granted, or it shall be temporarily revoked or suspended, if any applicant or any person(s) financially interested in the business, entity or organization have:

1. Supplied any false or misleading information in the application or omitted any requested information from the application;
2. Pleaded no contest to or been convicted of any felony within the last ten (10) years;
3. Had a license in his/her name which was revolted or suspended three (3) times by the Oregon Liquor Control Commission, either of which was in the last (5) years;
4. Been convicted and is currently on parole for any crime involving or related to gambling;
5. Had two (2) or more convictions within five (5) years for gambling-related activities; or
6. Violated any provision of this Ordinance.

4.21.070 License Not Transferable

No license shall be assigned or transferred; any such attempt shall void the license.

4.21.080 Responsibilities of Licensee

It shall be the responsibility of the licensee to ensure that:

1. No form of unlawful gambling is permitted upon the licensed premises.

2. Social games are conducted consistent with the provisions of state law, City ordinances and this Section.
3. There shall be no house player, house bank or house odds. All social games shall be open to public inspection during all hours of operation.
4. There are no off-premises signs advertising gambling, card playing, or social games.
5. The playing of all social games shall be so arranged as to provide equal access and visibility to any interested party.
6. No person under the age of eighteen (18) years shall be permitted to enter the licensed premises.
7. No charge, other than an entry fee, shall be collected from a player for the privilege of participating in a game.
8. No participant in a social game shall be charged a price for any consumer goods which is higher or lower than the price charged non-participants.
9. This Chapter, the rules for the social games, and the social gaming licenses are posted in a conspicuous place near the area where the games are being played.
10. The room or enclosure where the social games take place is open to free and immediate access by law enforcement officers. Doors leading into the room or enclosure remain unlocked during all hours of operation.
11. No social game is conducted between the hours of 2:00 am and 9:00 am.

4.21.090 Terms of License

All licenses issued hereunder shall be for a period of one (1) year and shall be renewed on the first business day of January of each year. Licenses are nontransferable and must be reapplied for at least thirty (30) days prior to the renewal date each year accompanied by the appropriate fee. All persons securing a license after first business day of January each year shall be required to pay the annual fee. All renewals shall be approved by the City Manager.

4.21.100 Revocation of License

A license is subject to revocation at any time for violation of this Ordinance or any of the provisions of state law related to gambling. If at any time facts arise or become known to the City Manager which are sufficient to show violation of this ordinance or state law, the City Manager shall notify the licensee in writing that the license is to be revolted and that all social gaming activities must cease within fifteen (15) days. The violations need not lead to a conviction, but must establish a reasonable doubt about the licensee's ability to perform the licensed activity without danger to property or public health or safety. The notice of revocation shall state the reason for the revocation, set a period of no less than 30 days before social gaming activities can recommence and inform the licensee of the procedures for filing an appeal.

4.21.110 Suspension of License

Upon determining that a licensed activity presents an immediate danger to person or property, the City Manager may suspend the license for the activity. The suspension shall take effect immediately on notice being received by the licensee, or being delivered to the licensee's business address as stated on the licensee's application for the license that is being suspended.

The notice shall be mailed to the licensee and state the reason for the suspension and inform the licensee of the procedures for filing an appeal. The City Manager may continue the suspension for as long as the reason for the suspension exists or until a decision by the appellate authority on an appeal regarding the suspension concludes the matter.

4.21.120 Penalties

In addition to the suspension or revocation of any license hereunder, any licensee, firm, corporation, association or person(s) associated with licensee who violates any provision of this ordinance, may, upon conviction, be fined in the amount not to exceed Five Hundred Dollars ($500.00) for each violation. Each day that a violation is permitted to occur is considered a separate violation.

4.21.130 Savings Clause

If any section, subsection, provision, clause or paragraph of this ordinance shall be adjudged or declared by any court of competent jurisdiction to be unconstitutional or invalid, such judgment shall not affect the validity of the remaining portions of this ordinance; it is hereby expressly declared that every other section, subsection, provision, clause or paragraph of this ordinance enacted, irrespective of the enactment or validity of the portion hereof declared to be unconstitutional or invalid, is valid.

ORDINANCE NO.

AN ORDINANCE OF THE COUNCIL OF THE CITY OF GRANTS PASS AMENDING THE GRANTS PASS MUNICIPAL CODE BY ADDING CHAPTER 4.21 SOCIAL GAMING.

WHEREAS:

1. The City Council finds that it is in the economic and recreational interest of the citizens of Grants Pass to permit social gaming; and

2. Social gaming is permitted in a private club, place of public accommodation, or business, as long as the City expressly permits it pursuant to ORS 167.121.

NOW, THEREFORE, THE CITY OF GRANTS PASS HEREBY ORDAINS: The Grants Pass Municipal Code is hereby amended to add a new Chapter 4.21 as set forth in Exhibit "1."

ADOPTED by the Council of the City of Grants Pass, Oregon, in regular session this 20th day April 2016 with the following specific roll call vote:

AYES:

NAYS: **ABSTAIN:** **ABSENT:**

SUBMITTED to and _____ by the Mayor of the City of Grants Pass, Oregon, this ____ day of April 2016.

_____
Darin Fowler, Mayor

ATTEST:

_____ Date submitted to Mayor: _____
Karen Frerk, City Recorder

Approved as to Form, Mark Bartholomew, City Attorney _____

Exhibit 1

Chapter 4.21
Social Gaming

Sections:

4.21.000 Title, Legislative Authority and Purpose
4.21.010 Social Games Permitted
4.21.020 Definitions
4.21.030 License Required for Social Games
4.21.040 Application for License and Investigation
4.21.041 Application Requirements
4.21.042 Application Renewal
4.21.050 License Fee
4.21.060 Standards for Issuance of License
4.21.070 License Not Transferable
4.21.080 Responsibilities of Licensee
4.21.081 Tournament Format Required
4.21.090 Terms of License
4.21.100 Revocation of License
4.21.110 Suspension Of License
4.21.120 Penalties
4.21.130 Savings Clause
4.21.140 Periodic Review Date

4.21.000 Title, Legislative Authority and Purpose

These regulations shall be known as the "City of Grants Pass Social Gaming Code" and may be cited as such. ORS 167.180, et seq. defines gambling and provides for the regulation of gambling in the State of Oregon. Pursuant to ORS 167.117(7) "gambling" does not include "social games." ORS 167.121 provides that counties and cities may, by ordinance, authorize the playing or conducting of Social Games in a private business, private club, or in a place of public accommodation. Such ordinances may provide for regulation or licensing of the authorized Social Games. The purpose of this ordinance is to authorize and regulate, in accordance with Oregon state law, the playing or conducting of Social Games. It is not the purpose of this ordinance and this ordinance is not intended to regulate any form of gambling or gaming authorized and regulated under Oregon state law other than Social Gaming as specifically defined in this ordinance.

4.21.010. Social Games Permitted

Social games, other than a lottery, between players in a private business, private club or in a place of public accommodation where no house player, house bank

or house odds exist and there is no house take (meaning no house income from the operation of the social game), are hereby permitted as provided herein.

4.21.020 Definitions

Unless the context requires otherwise, all terms set forth in this Ordinance shall have the same meaning as set forth in ORS 167.117.

"Person" and "Persons" means any individual, firm, partnership, corporation, joint venture, association, social club, fraternal organization, fraternity, sorority, non-profit organization, estate, trust, business trust, receiver, trustee, syndicate or any other group, organization or combination acting as a unit.

"Social Game" and "Social Gaming" means a game, other than a lottery, between players at a Special Event held in a private business or place of public accommodation where no house player, house bank or house odds exist and there is no house income from the operation of the Social Game.

4.21.030 License Required For Social Games

Any person(s), business, private club, non-profit organization or place of public accommodation desiring to permit patrons or invitees to engage in any social game within the City of Grants Pass shall acquire and maintain a valid license from the City. Licenses shall be granted only upon application to the City and upon approval by the City Manager.

4.21.040 Application For License And Investigation

An applicant shall submit an application in a form approved by the City Manager.

4.21.041 Application Requirements

Before a license for social gaming may be granted by the City Manager, an applicant must submit an application for a license to the City Manager with the following information and allow an investigation to be made thereon. A completed application form must include the true names, dates of birth, social security numbers and addresses of all persons financially interested in the business and/or all persons who are either on the board of directors of or hold offices in the entity or organization. The term "persons financially interested in the business" shall include all persons who share in the profits of the business where the social gaming activity is located, on the basis of gross or net revenue, including landlords, lessors, lessees, and the owners of the building, fixtures or equipment used in the social game. The application shall also include the names, dates of birth, social security numbers and addresses of all tournament sponsors if different from persons financially interested in the business.

4.21.042 Application Renewal

The grantee of a social gaming license must notify the City Manager within 10 days of any change in persons financially interested in the business or in the names of any persons who are either on the board of directors of or hold offices in the entity or organization and request a renewal of its license. At the time of such request, the applicant shall submit the information required by Section 4.21.041.

4.21.050 License Fee

For each business or other entity or organization licensed, an annual fee shall be required, to be set by resolution of the City Council.

4.21.060 Standards For Issuance Of License

The City Manager shall either approve the application and grant the license applied for, or deny the application and refuse to grant the license. The license shall not be granted, or it shall be temporarily revoked or suspended, if any applicant or any person(s) financially interested in the business, entity or organization have:

1. Supplied any false or misleading information in the application or omitted any requested information from the application;
2. Pleaded no contest to or been convicted of any felony within the last ten (10) years;
3. Had a license in his/her name which was revolted or suspended three (3) times by the Oregon Liquor Control Commission, either of which was in the last (5) years;
4. Been convicted and is currently on parole for any crime involving or related to gambling;
5. Had two (2) or more convictions within five (5) years for gambling-related activities; or
6. Violated any provision of this Ordinance.

4.21.070 License Not Transferable

No license shall be assigned or transferred; any such attempt shall void the license.

4.21.080 Responsibilities of Licensee

It shall be the responsibility of the licensee to ensure that:

1. No form of unlawful gambling is permitted upon the licensed premises.

2. Social games are conducted consistent with the provisions of state law, City ordinances and this Section.
3. There shall be no house player, house bank or house odds
4. All social games shall be open to public inspection during all hours of operation.
5. There are no off-premises signs advertising gambling, card playing, or social games.
6. The playing of all social games shall be so arranged as to provide equal access and visibility to any interested party.
7. No person under the age of eighteen (18) years shall be permitted to participate in a social game.
8. No charge, other than an entry fee, shall be collected from a player for the privilege of participating in a game.
9. No participant in a social game shall be charged a price for any consumer goods which is higher or lower than the price charged non-participants.
10. This Chapter, the rules for the social games, and the social gaming licenses are posted in a conspicuous place near the area where the games are being played.
11. The room or enclosure where the social games take place is open to free and immediate access by law enforcement officers. Doors leading into the room or enclosure remain unlocked during all hours of operation.
12. No social game is conducted between the hours of 2:00 am and 9:00 am.

4.21.090 Terms of License

All licenses issued hereunder shall be for a period of one (1) year and shall be renewed on the first business day of January of each year. Licenses are nontransferable and must be reapplied for at least thirty (30) days prior to the renewal date each year accompanied by the appropriate fee. All persons securing a license after first business day of January each year shall be required to pay the annual fee. All renewals shall be approved by the City Manager.

4.21.100 Revocation of License

A license is subject to revocation at any time for violation of this Ordinance or any of the provisions of state law related to gambling. If at any time facts arise or become known to the City Manager which are sufficient to show violation of this ordinance or state law, the City Manager shall notify the licensee in writing that the license is to be revolted and that all social gaming activities must cease within fifteen (15) days. The violations need not lead to a conviction, but must establish a reasonable doubt about the licensee's ability to perform the licensed activity without danger to property or public health or safety. The notice of revocation shall state the reason for the revocation, set a period of no less than 30 days before social gaming activities can recommence and inform the licensee of the procedures for filing an appeal.

4.21.110 Suspension of License

Upon determining that a licensed activity presents an immediate danger to person or property, the City Manager may suspend the license for the activity. The suspension shall take effect immediately on notice being received by the licensee, or being delivered to the licensee's business address as stated on the licensee's application for the license that is being suspended.

The notice shall be mailed to the licensee and state the reason for the suspension and inform the licensee of the procedures for filing an appeal. The City Manager may continue the suspension for as long as the reason for the suspension exists or until a decision by the appellate authority on an appeal regarding the suspension concludes the matter.

4.21.120 Penalties

In addition to the suspension or revocation of any license hereunder, any licensee, firm, corporation, association or person(s) associated with licensee who violates any provision of this ordinance, may, upon conviction, be fined in the amount not to exceed Five Hundred Dollars ($500.00) for each violation. Each day that a violation is permitted to occur is considered a separate violation.

4.21.130 Savings Clause

If any section, subsection, provision, clause or paragraph of this ordinance shall be adjudged or declared by any court of competent jurisdiction to be unconstitutional or invalid, such judgment shall not affect the validity of the remaining portions of this ordinance; it is hereby expressly declared that every other section, subsection, provision, clause or paragraph of this ordinance enacted, irrespective of the enactment or validity of the portion hereof declared to be unconstitutional or invalid, is valid.

Item: Ordinance amending certain sections of Chapter 9.21 Sign Standards of the Grants Pass Municipal Code. Date: April 20, 2016

SUBJECT AND SUMMARY:

The proposal would amend/correct the Sign Code relative to signage in the City of Grants Pass.

RELATIONSHIP TO COUNCIL GOALS:

This supports Council's goals to **ENCOURAGE ECONOMIC OPPORTUNITIES** by providing better clarity for signage regulation, increase appropriate signage in the City of Grants Pass, and the Historical District; provide better opportunities for downtown merchants to attract business; and advertise the City of Grants Pass as an attractive downtown area for residents and visitors.

CALL TO ACTION SCHEDULE:

Call to action schedule: N/A.

BACKGROUND:

Section 9.21.030(A) Computations: Housekeeping; correcting size of outface of double–faced signs greater than 100 sq. feet per face for Figure 2 to correspond with the text within the Section.

Section 9.21.041(M) Signs Exempt from Permits: Revise definition clarifying historic advertising art and murals in the Historic District.

Section 9.21.041(T) Signs Exempt from Permits: Adding a title name to identify miscellaneous signs.

Section 9.21.047(D) Prohibited Signs: Delete Murals in the Historic District.

Section 9.21.090 Businesses in Residential Zones: Delete in entirety as the criteria is identified in other sections of 9.21.

Section 9.21.121(E) Signs in the G Street Historic District: Housekeeping; sentence remaining from a prior draft which was never adopted, but the fragment was never deleted from the actual text.

ITEM: 4.b. ORDINANCE AMENDING CERTAIN SECTIONS OF CHAPTER 9.21 SIGN STANDARDS OF THE CITY OF GRANTS PASS MUNICIPAL CODE.

Staff Report (continued):

Section 9.21.500(A)(2)(a) Special Signs for all Commercial and Industrial Zones: Clarification of A-Frame/Sandwich Board/Signs on Wheels relative to placement in public rights of way.

Section 9.21.600(A)(1) Signs in Residential Zones: Correction to street frontage size of signs.

COST IMPLICATION:

None.

ALTERNATIVES:

1. Approve the ordinance as proposed;
2. Modify the ordinance and adopt with additional changes; or
3. Reject the amendments as proposed.

RECOMMENDED ACTION:

It is recommended the Council approve the ordinance.

POTENTIAL MOTION:

I move to approve the Ordinance amending Chapter 9.21 Sign Standards of the Grants Pass Municipal Code

EXHIBIT A

Chapter 9.21

SIGN STANDARDS

Sections:

9.21.010 Purpose
9.21.020 Definitions
9.21.030 Computations
9.21.040 Permits Required
9.21.041 Signs Exempt From Permits
9.21.042 Application
9.21.043 Issuance of Permits
9.21.044 Installation
9.21.045 Permit Fee/No-Fee
9.21.046 Indemnification of City
9.21.047 Prohibited Signs
9.21.048 Abandoned Signs
9.21.050 Dangerous Signs
9.21.060 Signs in the General Commercial Zone
9.21.070 Signs in a Freeway Overlay Zone
9.21.080 Signs in a Neighborhood Commercial Zone
~~9.21.090 Businesses in Residential Zones~~
9.21.100 Signs for a Shopping Center
9.21.110 Signs in Industrial Zones
9.21.120 Signs in the Central Business District
9.21.121 Signs in the ~~G Street~~ Historic District
9.21.122 Downtown Mall Sign
9.21.130 Freestanding Signs Within a City Utility Easement
9.21.300 Signs for a Fairgrounds
9.21.400 Signs for Regional Hospitals, Schools, and All Sports Parks
9.21.500 Special Signs for all Commercial and Industrial Zones
9.21.600 Special Signs in Residential Zones
9.21.610 Temporary Political Signs Defined
9.21.620 General Placement Rules for all Temporary Political Signs
9.21.630 Temporary Political Signs in Industrial and Commercial Zones
9.21.640 Temporary Political Signs in Residential Zones
9.21.650 Enforcement
9.21.700 Grandfather Clause
9.21.750 Heritage Markers
9.21.755 Heritage Markers Located on Private Property
9.21.760 Heritage Markers Located on Public Property
9.21.800 Appeal

9.21.030 Computations

A. Computation of the area of a freestanding or projecting sign shall be calculated by adding the square footage of all the faces presenting a commercial message. Pole covers and columns shall not be included in the area of the measurement if they do not bear a commercial message. For signs 100 square feet or less per face, double-faced signs will be calculated as one sign only when placed back-to-back, with each outside face separated by no more than 30 inches. For signs greater than 100 square feet per face, double-faced signs will be calculated as one sign only when placed back-to-back, with each outside face separated by no more than 36 inches. See figures below: (Ord. 5434 §5, 2008)

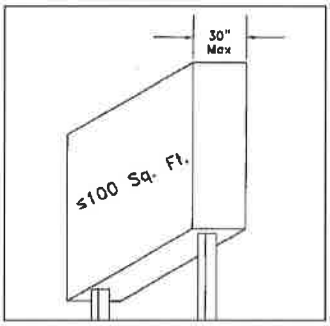

Double-faced signs (100 sq. ft. or less per face) will be calculated as one sign only when placed back-to-back, with each outside face separated by 30 inches or less.

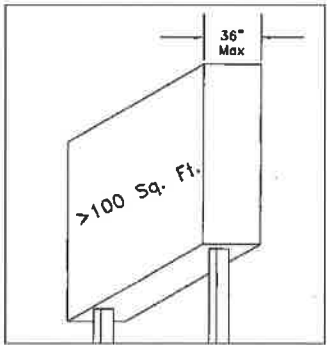

*Double-faced signs (greater than 100 sq. ft. per face) will be calculated as one sign only when placed back-to-back, with each outside face separated by ~~30~~ **36** inches or less.*

9.21.041 Signs Exempt From Permits

The following signs are permitted and are exempt from permits. Other than the exemption from having to obtain a sign permit, the remaining applicable provisions of this ordinance and other applicable laws and ordinances shall apply. (Ord. 5424 §5, 2008; 5490 §3, 2009)

A. Traffic Signs. Traffic signs and all other public safety, informational or directional signs erected or maintained by a municipal or governmental body or agency or public utility, including danger signs, railroad crossing signs and signs of a non-commercial nature required by public laws, ordinances or statutes.

B. Holiday Decorations. Temporary decorations or displays topical to a state or federally recognized Holiday and erected not earlier than 30 days prior to said Holiday and removed not later than 4 days after said Holiday.

C. Garage Sale Signs. Garage sale signs may be placed in accordance with Section 9.08.050 of the Municipal Code.

D. Entrance Signs. One sign up to 2 square feet may be placed at the entrance to a building on any side of the building. Such a sign will not count against the total sign allocation for the business.

E. Blade Signs. Blade signs must provide at least 8 feet of vertical clearance; one sign indicating the entrance to the premises is allowed per entrance; maximum size not to exceed 3 square feet.

F. Real Estate Signs: Sale or Lease.

1. One freestanding real estate sign is allowed per street frontage.

2. Size: Up to 10 square feet in residential zones, including riders and flyer holders; up to 32 square feet in commercial and industrial zones.

3. Height: Maximum height is 6 feet above grade.

4. Off-premise real estate signs are not allowed.

G. Real Estate Signs: Open Houses. Two "open house" signs are allowed per property, up to 6 square feet each. Signs must be removed daily. Off-premise signs are not allowed.

H. Project Signs: Residential Zone.

1. One construction project sign is allowed per street frontage on a lot being developed with a current development permit, up to 32 square

feet each, up to a maximum of 3 signs.

2. All signs shall be setback 10 feet from the property line and shall not exceed 10 feet in height.

3. Illumination is prohibited.

4. All signs must be removed within 30 days of the completion of the project or upon expiration of the development permit, whichever occurs first.

I. Project Signs: Industrial or Commercial Zone.

1. One construction project sign is allowed per street frontage on a lot being developed with a current development permit, up to 64 square feet each, up to a maximum of 3 signs.

2. One sign is allowed for each subcontractor up to 6 square feet.

3. Section 9.21.041 (H) (2) through (4) shall also apply.

J. Auction Signs.

1. One auction sign up to 6 square feet is allowed per street frontage on the parcel where the auction is located.

2. Off-premise direction signs up to 3 square feet each are allowed the day of the auction, outside of the public right of way.

K. Signs on athletic fields and scoreboards intended for on-premises viewing.

L. Projected Images: One image, up to 4 square feet per business, may be projected onto a sidewalk or other paved surface located on private property.

M. Historic Advertising Art **and Murals:** **If** located on a landmark building or within a Historic District**, the Historic Advertising or Mural requires review** ~~when approved~~ by the Historic Building and Sites Commission~~, or murals~~.

N. Signs on a Truck, Bus, Car, Boat, Trailer or other motorized vehicle and equipment provided all the following conditions are adhered to:

1. Primary purpose of such vehicle or equipment is not the display of signs.

2. Signs are painted upon or applied directly to an integral part of the vehicle or equipment.

3. Vehicle/equipment is in operating condition, currently registered and licensed to operate on public streets when applicable, and actively used in the daily function of a business/or use.

4. Vehicles and equipment are not used as static displays, advertising a product or service, nor utilized as storage, shelter or distribution points for commercial products or services for the general public.

O. Vehicles and Equipment engaged in active construction projects and the on premise storage of equipment and vehicles offered to the general public for rent or lease.

P. Indoor Signs. Signs located in the interior of any building or within an enclosed lobby or court of any group of buildings.

Q. Drive-Up Window Menu Board Sign, Service Station Price Sign or Electronic / Manual Reader Board. Where an existing permitted Drive-Up Window Menu Board Sign, Service Station Price Sign or electronic / manual reader board is modified by change of message or design on the sign face without any change to size or shape of the sign framework or structure. Includes changing messages on permitted Changing Image Signs.

R. Window Signs. Window signs located in windows, if they are mounted or painted upon the inside or outside of windows within all commercial or industrial zoning districts.

S. Hand Carried Signs.

T. **Miscellaneous Signs.** Any sign not legible from the public right of way.

U. Directory Signs.

V. Temporary Political Signs in compliance with the provisions of Section 9.21.610 – 650.

W. Temporary Sign Displays. An attention attracting device or devices, including but not limited to, flags (non-governmental), pennants, streamers, lawn signs, balloons, inflatable objects, and air powered objects.

9.21.047 Prohibited Signs

The following signs or devices are prohibited, and may neither be erected nor maintained: (Ord. 5424 §5, 2008, Ord. 5456 §2, 2008)

A. Traffic hazards: No sign shall be permitted at the intersection of a street or

driveway in such a manner as to obstruct free and clear vision of motor vehicle operators or at any location where by reason of its position, shape or color it may interfere with or be confused with authorized traffic sign, signal or device, or which makes use of a word, symbol or phrase, shape or color in such a manner as to interfere with, mislead or confuse traffic. Refer to the Grants Pass Development Code for setback restrictions.

B. Strobing lights or animated signs that resemble an emergency vehicle are prohibited and may not be displayed in any location visible from a public street, whether located inside or outside a building.

C. Billboards.

D. ~~Murals in the Historic District~~.

E. Signs on public property:

1. Except as set forth below or permitted elsewhere in this Chapter, no person shall paint, mark or write on, or post or otherwise affix in any manner, any hand-bill or sign to or upon any sidewalk, crosswalk, curb, curbstone, traffic sign, street lamp post, hydrant, public bench, tree, shrub, tree stake or guard, tree grate, railroad trestle, electric light, power, telephone or telegraph wire pole or wire appurtenant thereof, public art, ballot drop off box, bus shelter, utility vault, manhole cover, fire alarm, or upon any lighting system, public bridge, drinking fountain, statue, or fountain;

2. Any hand-bill or sign found posted or otherwise affixed upon any public or utility property contrary to the provisions of this section may be removed by any company, utility, organization, or individual owing or responsible for maintaining that property or any City employee. There shall be a rebuttable presumption that the person or organization whose name, telephone number or address appears as the person to contact on any hand-bill or sign posted is the person responsible for having posted the same. The person responsible for any such illegal posting shall be liable for the cost incurred in the removal thereof. The remedy is not exclusive of any other provisions allowed by law including being subject to the penalty provisions of Grants Pass Municipal Code 1.36.010.

3. The City reserves the right acting by resolution of the City Council to attach or affix in or on any public property metal plaques or plates or individual letters commemorating a historical, cultural, or artistic event, location or individual, flags, flower baskets, banners or public art.

~~9.21.090 Businesses in Residential Zones~~

~~A. One freestanding and one attached sign, not to exceed 32 square feet per sign on a permitted use.~~

~~No internally illuminated signs except emergency signs for hospitals, nursing homes, or assisted living facilities.~~

9.21.121 Signs in the ~~G Street~~ Historic District

The downtown Central Business District is recognized as the heart of the community and is valued for its historical, cultural, and economic significance. Signs are important tools for business owners and customers visiting the downtown area. This section of code is created to ensure the look and appearance of proposed signs is compatible with the façade of the buildings within the District and to promote the overall feel of the downtown core to ensure its longevity into the future.

A. The Historical Buildings and Sites Commission shall have the authority to review sign applications for existing and new structures located within the G Street Historic District. Appeals of decisions made by the Commission shall be appealed to the City Council.

B. Size & Placement: The allowable size of the proposed sign shall be in accordance with Municipal Code Section 9.21.120. Signs shall be sized and installed in appropriate sign areas along the façade, sides or rear of the building.

C. Materials: Sign materials shall be consistent with the traditional character of the building within the Historic District.

D. Color Palette: The colors proposed shall be those listed on the Historic Colors of America color palette. Other colors (such as bright or neon colors) will be considered at the discretion of the Commission.

E. Illumination: Signs may be illuminated or non-illuminated. Illuminated signage shall use lighting forms consistent with the traditional character of the District. ~~The following are appropriate lighting methods:~~

F. Shape & Relief: Signage in the Historic District is encouraged to be molded into complex shapes rather than plain rectangles, circles, or squares. Carvings, layers, and multiple forms are encouraged to provide dimension and depth to signs.

G. Banner Signs:

1. Banner signs may be permitted in the Historic District provided they meet the criteria listed in Section 9.21.500(D).
2. Banner signs may be installed in the Historic District for a maximum of 30 days, or the duration of the particular season or event, whichever is less. Events are grand openings, special sales, or other holiday or seasonal events.
3. Notwithstanding the provisions of Section 9.21.500(D), banner signs in the 'G' Street Historic District shall be permitted for a maximum period of one month. All other provisions of Section 9.21.500(D) shall apply regarding banner signs. This time period does not extend to signage placed on light posts in the right-of-way for non-advertising, decorative purposes.

H. Prohibited Signs:

1. Light Emitting Diode (LED) Changing Image Signs (note: LEDs are permissible when used as a light source behind back-lit opaque, or non-translucent, signage)
2. Box internally illuminated signs
3. Inflatable, fan-driven, or other similar signs or structures.

9.21.500 Special Signs for all Commercial and Industrial Zones
(Ord. 4929 §1, 1998; Ord. 5129 §1, 2002; Ord. 5408 §20, 2007) (Ord. 5424 §5, 2008)

A. A-Frame/Sandwich Board/Sign on wheels, which are located outside the Central Business District and where the building on the property does not have a zero lot line setback from the street right of way or sidewalk. (see Municipal Code section 9.21.120):

1. A-Frame/Sandwich Board/Sign on Wheels not to exceed 12-square feet in area per side for each business entrance is allowed. The edges of each sign face shall not be more than 38 inches apart. Business entrance is defined as either the door into the business or the area adjacent to a driveway serving the business.

2. Signs shall not be located within the public right of way except:

   a. During a community event sponsored or officially sanctioned by the City; **or**

   b. On weekends; or

   c. After 6:00 p.m. on weekdays.

3. The sign must be placed to allow a minimum of 4 feet of clearance on the sidewalk.

4. Signs displayed in a front yard or exterior yard setback area or near a driveway may remain when a business is closed.

5. Signs displayed on a sidewalk or in a planter strip in accordance with A.2. above (the area in between the curb and a sidewalk) shall be removed when a business is closed.

B. Second-Story/Basement Business Signs:

a. Second-story and basement enterprises or uses, which are maintained exclusively on a floor other than that on the street floor, shall be allowed a wall sign up to 50% of the ground level allotment. See Section 9.21.060 (B).

b. Minimum allowed per business is up to 30 square feet.

C. Service Station Price Signs: Price pod signs and similar signs which are used solely to advertise the price of vehicle fuel and which do not exceed 32 square feet will not count against total sign area or number allotment. Any size in excess shall be counted against sign allotment.

D. Drive-Up Window Signs: One freestanding sign not to exceed 32 square feet in area for any single parcel of land occupied by a drive-up window business. Such signs shall not project into the public right-of-way and will not count against total signage allotment.

E. Banners (Attached to a building and/or Displayed on the property)

1. One temporary sign up to 40 square feet is allowed per building side.

2. Where multiple businesses are connected to each by common walls; one (1) banner up to forty (40) square feet is allowed per business.

3. No more than two (2) banners not attached to a building are permitted per street frontage.

4. Display period is limited to 6 months. A no-fee permit is required.

5. Banners may be installed on temporary man-made structures such as posts or fences; however in no case shall banners be attached to trees or public utility poles.

F. Secondary Outdoor Business on Lot: A secondary outdoor business may have one sign up to 12 square feet and 8 feet in height. The sign must be attached to the cart or structure and be located outside the building setback

area.

G. Use of an Undeveloped Lot in a Commercial or Industrial Subdivision: One freestanding sign may be erected on an undeveloped lot in a commercial or industrial subdivision for the purpose of directing attention to a business, commodity, service, entertainment or attraction sold, offered, existing or planned either on the lot where the sign is displayed or elsewhere within the subdivision, provided that all of the following conditions are met: (Ord. 4974 §1, 1999)

1. The sign is located on an undeveloped lot of land in a commercial or industrial subdivision with a minimum of 5 lots within the subdivision; and (Ord. 4974 §1, 1999)

2. Only one such sign is permitted per subdivision; and (Ord. 4974 §1, 1999)

3. The size of the sign is subject to the provisions of Section 9.21.060 (A) Signs in the General Commercial Zone or Section 9.21.110 (A) Signs in Industrial Zones, depending on the zoning of the property; and (Ord. 4974 §1, 1999)

4. If the lot on which the sign is proposed to be located has more than one street frontage, the sign shall front the street with either the higher functional classification or the higher number of daily traffic counts; and (Ord. 4974 §1, 1999)

5. When the lot is developed, the existing sign will be credited against the current limits for both size and number of signs on a developed lot. (Ord. 4974 §1, 1999)

H. Temporary decorations over 40 square feet in size, which qualify as a sign and which are lit with electrical bulbs or tubes, may be erected beginning November 1 of each year so long as they are removed by the following January 31. (Ord. 5019 §1, 2000)

Said signs may not be electrically lit until the day after Thanksgiving and shall not remain lit after January 7 of the following year. (Ord. 5019 §1, 2000)

Words, logos, and corporate symbols which could be reasonably construed as commercial advertising shall consist of not more than 10% of the overall size of the sign (decoration). (Ord. 5019 §1, 2000)

Such signs shall be subject to the review and approval of not less than two members of a three member panel of citizens appointed by the Council. A denial by the panel may be appealed to the Council if the appeal is filed in writing not less than one week from the date of the denial by the panel. (Ord. 5019 §1, 2000)

9.21.600 ~~Special~~ Signs in Residential Zones

A. Offices, Bed and Breakfasts and Apartments in a Residential Area.

~~1. One sign is allowed per street frontage up to 12 square feet and 5 feet in height.~~

1. **One freestanding and one attached sign, not to exceed 32 square feet and 5 feet in height.**

2. Signs may not be internally illuminated.

B. Real Estate Signs: Housing Development/Subdivision:

1. One real estate sign is allowed at each entrance or frontage road.

2. Size: Up to 32 square feet each.

3. Flags are allowed on flag poles not exceeding 30 feet above the ground.

4. Temporary signs must comply with Section 9.21.500 (E) of this code.

5. Off-premise real estate signs are not allowed.

ORDINANCE NO.

AN ORDINANCE OF THE COUNCIL OF THE CITY OF GRANTS PASS AMENDING CERTAIN SECTIONS OF CHAPTER 9.21 SIGN STANDARDS OF THE GRANTS PASS MUNICIPAL CODE.

WHEREAS:

1. Title 9 of the City of Grants Pass Municipal Code was most recently revised on November 15, 2015; and

2. It is appropriate to review and make modifications to Code provisions from time to time in order to address changing needs and provide opportunities to further economic prosperity for local businesses; and

3. The proposed amendments are consistent with preserving the aesthetic quality of the City of Grants Pass; and

4. The proposed amendments to regulate signage are in keeping with the goals of the City Council and the Historical Buildings and Sites Commission.

NOW, THEREFORE, THE CITY OF GRANTS PASS HEREBY ORDAINS:

Section 1. The City hereby adopts the proposed amendments to Chapter 9.21 Sign Standards of the City of Grants Pass Municipal Code as set forth in Exhibit 1.

ADOPTED by the Council of the City of Grants Pass, Oregon, in regular session this 20th day of April, 2016, with the following specific roll call vote:

AYES:

NAYS: **ABSTAIN:** **ABSENT:**

SUBMITTED to and _____ by the Mayor of the City of Grants Pass, Oregon, this _____ day of April, 2016.

_____
Darin Fowler, Mayor

ATTEST:

_____ Date submitted to Mayor: _____
Karen Frerk, City Recorder

Approved as to Form, Mark Bartholomew, City Attorney _____

EXHIBIT 1

Chapter 9.21

SIGN STANDARDS

Sections:

9.21.010 Purpose
9.21.020 Definitions
9.21.030 Computations
9.21.040 Permits Required
9.21.041 Signs Exempt From Permits
9.21.042 Application
9.21.043 Issuance of Permits
9.21.044 Installation
9.21.045 Permit Fee/No-Fee
9.21.046 Indemnification of City
9.21.047 Prohibited Signs
9.21.048 Abandoned Signs
9.21.050 Dangerous Signs
9.21.060 Signs in the General Commercial Zone
9.21.070 Signs in a Freeway Overlay Zone
9.21.080 Signs in a Neighborhood Commercial Zone
9.21.100 Signs for a Shopping Center
9.21.110 Signs in Industrial Zones
9.21.120 Signs in the Central Business District
9.21.121 Signs in the Historic District
9.21.122 Downtown Mall Sign
9.21.130 Freestanding Signs Within a City Utility Easement
9.21.300 Signs for a Fairgrounds
9.21.400 Signs for Regional Hospitals, Schools, and All Sports Parks
9.21.500 Special Signs for all Commercial and Industrial Zones
9.21.600 Special Signs in Residential Zones
9.21.610 Temporary Political Signs Defined
9.21.620 General Placement Rules for all Temporary Political Signs
9.21.630 Temporary Political Signs in Industrial and Commercial Zones
9.21.640 Temporary Political Signs in Residential Zones
9.21.650 Enforcement
9.21.700 Grandfather Clause
9.21.750 Heritage Markers
9.21.755 Heritage Markers Located on Private Property
9.21.760 Heritage Markers Located on Public Property
9.21.800 Appeal

9.21.030 Computations

A. Computation of the area of a freestanding or projecting sign shall be calculated by adding the square footage of all the faces presenting a commercial message. Pole covers and columns shall not be included in the area of the measurement if they do not bear a commercial message. For signs 100 square feet or less per face, double-faced signs will be calculated as one sign only when placed back-to-back, with each outside face separated by no more than 30 inches. For signs greater than 100 square feet per face, double-faced signs will be calculated as one sign only when placed back-to-back, with each outside face separated by no more than 36 inches. See figures below: (Ord. 5434 §5, 2008)

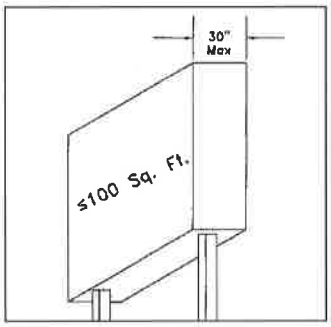

Double-faced signs (100 sq. ft. or less per face) will be calculated as one sign only when placed back-to-back, with each outside face separated by 30 inches or less.

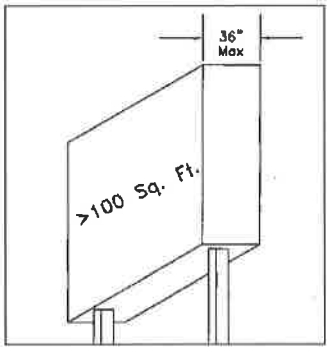

Double-faced signs (greater than 100 sq. ft. per face) will be calculated as one sign only when placed back-to-back, with each outside face separated by36 inches or less.

9.21.041 Signs Exempt From Permits

The following signs are permitted and are exempt from permits. Other than the exemption from having to obtain a sign permit, the remaining applicable provisions of this ordinance and other applicable laws and ordinances shall apply. (Ord. 5424 §5, 2008; 5490 §3, 2009)

A. Traffic Signs. Traffic signs and all other public safety, informational or directional signs erected or maintained by a municipal or governmental body or agency or public utility, including danger signs, railroad crossing signs and signs of a non-commercial nature required by public laws, ordinances or statutes.

B. Holiday Decorations. Temporary decorations or displays topical to a state or federally recognized Holiday and erected not earlier than 30 days prior to said Holiday and removed not later than 4 days after said Holiday.

C. Garage Sale Signs. Garage sale signs may be placed in accordance with Section 9.08.050 of the Municipal Code.

D. Entrance Signs. One sign up to 2 square feet may be placed at the entrance to a building on any side of the building. Such a sign will not count against the total sign allocation for the business.

E. Blade Signs. Blade signs must provide at least 8 feet of vertical clearance; one sign indicating the entrance to the premises is allowed per entrance; maximum size not to exceed 3 square feet.

F. Real Estate Signs: Sale or Lease.

1. One freestanding real estate sign is allowed per street frontage.

2. Size: Up to 10 square feet in residential zones, including riders and flyer holders; up to 32 square feet in commercial and industrial zones.

3. Height: Maximum height is 6 feet above grade.

4. Off-premise real estate signs are not allowed.

G. Real Estate Signs: Open Houses. Two "open house" signs are allowed per property, up to 6 square feet each. Signs must be removed daily. Off-premise signs are not allowed.

H. Project Signs: Residential Zone.

1. One construction project sign is allowed per street frontage on a lot being developed with a current development permit, up to 32 square

feet each, up to a maximum of 3 signs.

2. All signs shall be setback 10 feet from the property line and shall not exceed 10 feet in height.

3. Illumination is prohibited.

4. All signs must be removed within 30 days of the completion of the project or upon expiration of the development permit, whichever occurs first.

I. Project Signs: Industrial or Commercial Zone.

1. One construction project sign is allowed per street frontage on a lot being developed with a current development permit, up to 64 square feet each, up to a maximum of 3 signs.

2. One sign is allowed for each subcontractor up to 6 square feet.

3. Section 9.21.041 (H) (2) through (4) shall also apply.

J. Auction Signs.

1. One auction sign up to 6 square feet is allowed per street frontage on the parcel where the auction is located.

2. Off-premise direction signs up to 3 square feet each are allowed the day of the auction, outside of the public right of way.

K. Signs on athletic fields and scoreboards intended for on-premises viewing.

L. Projected Images: One image, up to 4 square feet per business, may be projected onto a sidewalk or other paved surface located on private property.

M. Historic Advertising Art and Murals: If located on a landmark building or within a Historic District, the Historic Advertising or Mural requires review by the Historic Building and Sites Commission.

N. Signs on a Truck, Bus, Car, Boat, Trailer or other motorized vehicle and equipment provided all the following conditions are adhered to:

1. Primary purpose of such vehicle or equipment is not the display of signs.

2. Signs are painted upon or applied directly to an integral part of the vehicle or equipment.

3. Vehicle/equipment is in operating condition, currently registered and licensed to operate on public streets when applicable, and actively used in the daily function of a business/or use.

4. Vehicles and equipment are not used as static displays, advertising a product or service, nor utilized as storage, shelter or distribution points for commercial products or services for the general public.

O. Vehicles and Equipment engaged in active construction projects and the on premise storage of equipment and vehicles offered to the general public for rent or lease.

P. Indoor Signs. Signs located in the interior of any building or within an enclosed lobby or court of any group of buildings.

Q. Drive-Up Window Menu Board Sign, Service Station Price Sign or Electronic / Manual Reader Board. Where an existing permitted Drive-Up Window Menu Board Sign, Service Station Price Sign or electronic / manual reader board is modified by change of message or design on the sign face without any change to size or shape of the sign framework or structure. Includes changing messages on permitted Changing Image Signs.

R. Window Signs. Window signs located in windows, if they are mounted or painted upon the inside or outside of windows within all commercial or industrial zoning districts.

S. Hand Carried Signs.

T. Miscellaneous Signs. Any sign not legible from the public right of way.

U. Directory Signs.

V. Temporary Political Signs in compliance with the provisions of Section 9.21.610 – 650.

W. Temporary Sign Displays. An attention attracting device or devices, including but not limited to, flags (non-governmental), pennants, streamers, lawn signs, balloons, inflatable objects, and air powered objects.

9.21.047 Prohibited Signs

The following signs or devices are prohibited, and may neither be erected nor maintained: (Ord. 5424 §5, 2008, Ord. 5456 §2, 2008)

A. Traffic hazards: No sign shall be permitted at the intersection of a street or driveway in such a manner as to obstruct free and clear vision of motor

vehicle operators or at any location where by reason of its position, shape or color it may interfere with or be confused with authorized traffic sign, signal or device, or which makes use of a word, symbol or phrase, shape or color in such a manner as to interfere with, mislead or confuse traffic. Refer to the Grants Pass Development Code for setback restrictions.

B. Strobing lights or animated signs that resemble an emergency vehicle are prohibited and may not be displayed in any location visible from a public street, whether located inside or outside a building.

C. Billboards.

D. Signs on public property:

1. Except as set forth below or permitted elsewhere in this Chapter, no person shall paint, mark or write on, or post or otherwise affix in any manner, any hand-bill or sign to or upon any sidewalk, crosswalk, curb, curbstone, traffic sign, street lamp post, hydrant, public bench, tree, shrub, tree stake or guard, tree grate, railroad trestle, electric light, power, telephone or telegraph wire pole or wire appurtenant thereof, public art, ballot drop off box, bus shelter, utility vault, manhole cover, fire alarm, or upon any lighting system, public bridge, drinking fountain, statue, or fountain;

2. Any hand-bill or sign found posted or otherwise affixed upon any public or utility property contrary to the provisions of this section may be removed by any company, utility, organization, or individual owing or responsible for maintaining that property or any City employee. There shall be a rebuttable presumption that the person or organization whose name, telephone number or address appears as the person to contact on any hand-bill or sign posted is the person responsible for having posted the same. The person responsible for any such illegal posting shall be liable for the cost incurred in the removal thereof. The remedy is not exclusive of any other provisions allowed by law including being subject to the penalty provisions of Grants Pass Municipal Code 1.36.010.

3. The City reserves the right acting by resolution of the City Council to attach or affix in or on any public property metal plaques or plates or individual letters commemorating a historical, cultural, or artistic event, location or individual, flags, flower baskets, banners or public art.

9.21.121 Signs in the Historic District

The downtown Central Business District is recognized as the heart of the community and is valued for its historical, cultural, and economic significance. Signs are important tools for business owners and customers visiting the downtown area. This section of code is created to ensure the look and appearance of proposed signs is compatible with the façade of the buildings within the District and to promote the overall feel of the downtown core to ensure its longevity into the future.

A. The Historical Buildings and Sites Commission shall have the authority to review sign applications for existing and new structures located within the G Street Historic District. Appeals of decisions made by the Commission shall be appealed to the City Council.

B. Size & Placement: The allowable size of the proposed sign shall be in accordance with Municipal Code Section 9.21.120. Signs shall be sized and installed in appropriate sign areas along the façade, sides or rear of the building.

C. Materials: Sign materials shall be consistent with the traditional character of the building within the Historic District.

D. Color Palette: The colors proposed shall be those listed on the Historic Colors of America color palette. Other colors (such as bright or neon colors) will be considered at the discretion of the Commission.

E. Illumination: Signs may be illuminated or non-illuminated. Illuminated signage shall use lighting forms consistent with the traditional character of the District.

F. Shape & Relief: Signage in the Historic District is encouraged to be molded into complex shapes rather than plain rectangles, circles, or squares. Carvings, layers, and multiple forms are encouraged to provide dimension and depth to signs.

G. Banner Signs:

    1. Banner signs may be permitted in the Historic District provided they meet the criteria listed in Section 9.21.500(D).
    2. Banner signs may be installed in the Historic District for a maximum of 30 days, or the duration of the particular season or event, whichever is less. Events are grand openings, special sales, or other holiday or seasonal events.
    3. Notwithstanding the provisions of Section 9.21.500(D), banner signs in the 'G' Street Historic District shall be permitted for a maximum period of one month. All other provisions of Section 9.21.500(D) shall apply regarding

banner signs. This time period does not extend to signage placed on light posts in the right-of-way for non-advertising, decorative purposes.

H. Prohibited Signs:

1. Light Emitting Diode (LED) Changing Image Signs (note: LEDs are permissible when used as a light source behind back-lit opaque, or non-translucent, signage)
2. Box internally illuminated signs
3. Inflatable, fan-driven, or other similar signs or structures.

9.21.500 Special Signs for all Commercial and Industrial Zones
(Ord. 4929 §1, 1998; Ord. 5129 §1, 2002; Ord. 5408 §20, 2007) (Ord. 5424 §5, 2008)

A. A-Frame/Sandwich Board/Sign on wheels, which are located outside the Central Business District and where the building on the property does not have a zero lot line setback from the street right of way or sidewalk. (see Municipal Code section 9.21.120):

1. A-Frame/Sandwich Board/Sign on Wheels not to exceed 12-square feet in area per side for each business entrance is allowed. The edges of each sign face shall not be more than 38 inches apart. Business entrance is defined as either the door into the business or the area adjacent to a driveway serving the business.

2. Signs shall not be located within the public right of way except:

   a. During a community event sponsored or officially sanctioned by the City; or

   b. On weekends; or

   c. After 6:00 p.m. on weekdays.

3. The sign must be placed to allow a minimum of 4 feet of clearance on the sidewalk.

4. Signs displayed in a front yard or exterior yard setback area or near a driveway may remain when a business is closed.

5. Signs displayed on a sidewalk or in a planter strip in accordance with A.2. above (the area in between the curb and a sidewalk) shall be removed when a business is closed.

B. Second-Story/Basement Business Signs:

a. Second-story and basement enterprises or uses, which are maintained

exclusively on a floor other than that on the street floor, shall be allowed a wall sign up to 50% of the ground level allotment. See Section 9.21.060 (B).

b. Minimum allowed per business is up to 30 square feet.

C. Service Station Price Signs: Price pod signs and similar signs which are used solely to advertise the price of vehicle fuel and which do not exceed 32 square feet will not count against total sign area or number allotment. Any size in excess shall be counted against sign allotment.

D. Drive-Up Window Signs: One freestanding sign not to exceed 32 square feet in area for any single parcel of land occupied by a drive-up window business. Such signs shall not project into the public right-of-way and will not count against total signage allotment.

E. Banners (Attached to a building and/or Displayed on the property)

1. One temporary sign up to 40 square feet is allowed per building side.

2. Where multiple businesses are connected to each by common walls; one (1) banner up to forty (40) square feet is allowed per business.

3. No more than two (2) banners not attached to a building are permitted per street frontage.

4. Display period is limited to 6 months. A no-fee permit is required.

5. Banners may be installed on temporary man-made structures such as posts or fences; however in no case shall banners be attached to trees or public utility poles.

F. Secondary Outdoor Business on Lot: A secondary outdoor business may have one sign up to 12 square feet and 8 feet in height. The sign must be attached to the cart or structure and be located outside the building setback area.

G. Use of an Undeveloped Lot in a Commercial or Industrial Subdivision: One freestanding sign may be erected on an undeveloped lot in a commercial or industrial subdivision for the purpose of directing attention to a business, commodity, service, entertainment or attraction sold, offered, existing or planned either on the lot where the sign is displayed or elsewhere within the subdivision, provided that all of the following conditions are met: (Ord. 4974 §1, 1999)

1. The sign is located on an undeveloped lot of land in a commercial or industrial subdivision with a minimum of 5 lots within the subdivision;

and (Ord. 4974 §1, 1999)

2. Only one such sign is permitted per subdivision; and (Ord. 4974 §1, 1999)

3. The size of the sign is subject to the provisions of Section 9.21.060 (A) Signs in the General Commercial Zone or Section 9.21.110 (A) Signs in Industrial Zones, depending on the zoning of the property; and (Ord. 4974 §1, 1999)

4. If the lot on which the sign is proposed to be located has more than one street frontage, the sign shall front the street with either the higher functional classification or the higher number of daily traffic counts; and (Ord. 4974 §1, 1999)

5. When the lot is developed, the existing sign will be credited against the current limits for both size and number of signs on a developed lot. (Ord. 4974 §1, 1999)

H. Temporary decorations over 40 square feet in size, which qualify as a sign and which are lit with electrical bulbs or tubes, may be erected beginning November 1 of each year so long as they are removed by the following January 31. (Ord. 5019 §1, 2000)

Said signs may not be electrically lit until the day after Thanksgiving and shall not remain lit after January 7 of the following year. (Ord. 5019 §1, 2000)

Words, logos, and corporate symbols which could be reasonably construed as commercial advertising shall consist of not more than 10% of the overall size of the sign (decoration). (Ord. 5019 §1, 2000)

Such signs shall be subject to the review and approval of not less than two members of a three member panel of citizens appointed by the Council. A denial by the panel may be appealed to the Council if the appeal is filed in writing not less than one week from the date of the denial by the panel. (Ord. 5019 §1, 2000)

9.21.600 ~~Special~~ Signs in Residential Zones

A. Offices, Bed and Breakfasts and Apartments in a Residential Area.

1. One freestanding and one attached sign, not to exceed 32 square feet and 5 feet in height.

2. Signs may not be internally illuminated.

B. Real Estate Signs: Housing Development/Subdivision:

1. One real estate sign is allowed at each entrance or frontage road.

2. Size: Up to 32 square feet each.

3. Flags are allowed on flag poles not exceeding 30 feet above the ground.

4. Temporary signs must comply with Section 9.21.500 (E) of this code.

5. Off-premise real estate signs are not allowed.

Item: Ordinance amending Grants Pass Municipal Code Section 6.46.110 Commercial Activity in Parks.

Date: April 20, 2016

SUBJECT AND SUMMARY:

The proposal is an ordinance that would add the provision allowing private instruction to be conducted within City parks as a commercial activity.

RELATIONSHIP TO COUNCIL GOALS:

This supports Council's goals to **FACILITATE SUSTAINABLE, MANAGEABLE GROWTH** by developing proactive solutions to community development challenges.

CALL TO ACTION SCHEDULE:

Call to action schedule: N/A.

BACKGROUND:

The Municipal Code currently restricts commercial activity in City's parks unless there is a written agreement between the City and a vendor. This Section of the Code restricts such commercial activity as ice cream trucks, food vendors and boat rentals on park property. Though not specifically called out in this Section of the Municipal Code, staff has previously taken the direction that all sporting instruction was to be conducted and/or offered by non-profit organizations (such as schools, churches, etc.).

During the past year, Parks & Community Development and Public Safety have been involved with a particular tennis instructor who is conducting individual and group lessons on park property (presumably for profit). The City has an agreement with the Grants Pass Tennis Association (GPTA) (a non-profit organization) to run the City's tennis program through Recreation Northwest, Inc. (RNW). RNW manages the City's park facilities and recreational programs. The instructor is not affiliated with GPTA, and has been cited on several occasions for violating Section 6.46.110 of the Municipal Code (Commercial Activity in Parks).

To alleviate this conflict, staff is proposing to create a process that allows private instruction on park property. The proposed process would include registering with Parks & Community Development (via RNW), pass a background check, provide the necessary liability insurance, schedule park facilities, and pay a rental fee.

Staff Report Continued:

COST IMPLICATION:

None.

ALTERNATIVES:

1) Approve the ordinance as proposed;

2) Modify the ordinance and adopt with additional changes; or

3) Reject the amendment as proposed.

RECOMMENDED ACTION:

It is recommended the Council approve the ordinance.

POTENTIAL MOTION:

I move to approve the ordinance amending Grants Pass Municipal Code Section 6.46.110 Commercial Activity in Parks.

Exhibit 'A'

6.46.110 Commercial Activity in Parks

A. It is unlawful for any person, firm, or corporation to solicit, advertise, or peddle for commercial purposes within the boundaries of such City parks, either by word of mouth, printed matter, or other forms of commercial soliciting, advertising, or peddling; unless otherwise provided for by written agreement with the Council of the City. (Ord. 3869 §9, 1972; Ord. 4337 §3, 1980)

B. Private instruction for individuals or groups is allowed within City parks provided an application has been approved by the Parks & Community Development Department. Approval of the permit will be based upon the successful completion of a background check and proof of liability insurance.

1. **Liability and Insurance: A signed statement that the permittee shall hold harmless the City, its officers, and employees, and shall indemnify the City, its officers, and employees for any claims for damages to property or injury to persons which may occur in connection with an activity carried on under the terms of the permit. Permittee shall furnish and maintain such public liability and property damage insurance as will protect permittee and City from all claims for damage to property or bodily injury, including death, which may arise from operations under the permit in connection therewith. Such insurance shall provide coverage of not less than the amount of municipal tort liability under the Oregon Tort Claims Act. The permittee shall name the City of Grants Pass as an additional insured by attaching an endorsement to the certificate of insurance. Such insurance shall be without prejudice to coverage otherwise existing therein, and shall name as additional insured the City, its officers and employees, and shall further provide that the policy shall not terminate or be canceled prior to expiration of the permit without thirty (30) days written notice to the City.**

2. **The Parks & Community Development Department is responsible for managing and coordinating park facilities to provide opportunities for all citizens to participate in recreation. Therefore, private instructors are required to reserve park facilities for their instruction times and pay the appropriate rental fee.**

ORDINANCE NO.

AN ORDINANCE OF THE COUNCIL OF THE CITY OF GRANTS PASS AMENDING GRANTS PASS MUNICIPAL CODE SECTION 6.46.110 COMMERCIAL ACTIVITY IN PARKS.

WHEREAS:

1. Title 6 of the Grants Pass Municipal Code was most recently revised on September 5, 2015; and

2. It is appropriate to review and make modifications to Code provisions from time to time in order to address changing needs in the community; and

3. The proposed amendment is consistent with preserving the aesthetic quality of the City of Grants Pass; and

4. The proposed amendment is in keeping with the goals of the City Council.

NOW, THEREFORE, THE CITY OF GRANTS PASS HEREBY ORDAINS:

Section 1. The City hereby adopts the proposed amendment to the Grants Pass Municipal Code Section 6.46.110 Commercial Activity in Parks, as set forth in Exhibit 1.

ADOPTED by the Council of the City of Grants Pass, Oregon, in regular session this 20th day of April, 2016, with the following specific roll call vote:

AYES:

NAYS: **ABSTAIN:** **ABSENT:**

SUBMITTED to and _____ by the Mayor of the City of Grants Pass, Oregon, this _____ day of April, 2016.

_____
Darin Fowler, Mayor

ATTEST:

_____
Karen Frerk, City Recorder

Date submitted to Mayor: _____

Approved as to Form, Mark Bartholomew, City Attorney _____

Exhibit 1

6.46.110 Commercial Activity in Parks

A. It is unlawful for any person, firm, or corporation to solicit, advertise, or peddle for commercial purposes within the boundaries of such City parks, either by word of mouth, printed matter, or other forms of commercial soliciting, advertising, or peddling; unless otherwise provided for by written agreement with the Council of the City. (Ord. 3869 §9, 1972; Ord. 4337 §3, 1980)

B. Private instruction for individuals or groups is allowed within City parks provided an application has been approved by the Parks & Community Development Department. Approval of the permit will be based upon the successful completion of a background check and proof of liability insurance.

1. Liability and Insurance: A signed statement that the permittee shall hold harmless the City, its officers, and employees, and shall indemnify the City, its officers, and employees for any claims for damages to property or injury to persons which may occur in connection with an activity carried on under the terms of the permit. Permittee shall furnish and maintain such public liability and property damage insurance as will protect permittee and City from all claims for damage to property or bodily injury, including death, which may arise from operations under the permit in connection therewith. Such insurance shall provide coverage of not less than the amount of municipal tort liability under the Oregon Tort Claims Act. The permittee shall name the City of Grants Pass as an additional insured by attaching an endorsement to the certificate of insurance. Such insurance shall be without prejudice to coverage otherwise existing therein, and shall name as additional insured the City, its officers and employees, and shall further provide that the policy shall not terminate or be canceled prior to expiration of the permit without thirty (30) days written notice to the City.

2. The Parks & Community Development Department is responsible for managing and coordinating park facilities to provide opportunities for all citizens to participate in recreation. Therefore, private instructors are required to reserve park facilities for their instruction times and pay the appropriate rental fee.

Item: Ordinance amending the Grants Pass Municipal Code by adding Chapter 8.70 - Jail Services Utility Fee.

Date: April 20, 2016

SUBJECT AND SUMMARY:

This ordinance would establish a Jail Services Utility Fee and establish the basis for the implementation and administration of the utility.

RELATIONSHIP TO COUNCIL GOALS:

This supports Council's goal to **KEEP CITIZENS SAFE** by providing jail services that are needed for effective and efficient law enforcement services.

BACKGROUND:

For the last four years, Josephine County has had insufficient resources to provide criminal justice programs, such as the jail services, on a countywide basis. The City's Police Division relies on these services, as do other law enforcement agencies that serve throughout the County. The City's Police Division needs these services to be able to provide efficient and effective law enforcement services. The City and County entered into a short-term contract in each of the last three fiscal years to rent up to 28-30 jail beds for exclusive use by the Grants Pass Police Division. A contract extension for next fiscal year (FY'17) has already been signed at the same annual cost as the last two fiscal years of $972,000 for the full fiscal year. The Council directed staff to draft a Jail Services Utility Ordinance that would provide the resources to continue renting jail beds in the County's adult jail.

This ordinance does not set the monthly utility fee rate that would provide the resources to continue providing jail services for exclusive City use. The ordinance merely establishes the Jail Services Utility, the basis and restrictions for the fee, sets the overall administrative responsibilities related to the fee, and establishes a legal sunset for the fee when the County is able to provide for sufficient, ongoing, jail services on a countywide basis or June 30, 2017, whichever happens first. The actual fee rate for this utility would be set by a separate resolution. The following are the key terms of the Jail Services Utility Fee Ordinance:

- The calculation method, administration, and most other Municipal Code terms are modeled after the City's existing Transportation Utility Fee ordinance. Fees are set separately by resolution just like other City utility rates. This new ordinance refers to the fee categories in the Transportation Utility Fee ordinance. The utility fee category and calculation methodology is largely based on trips, like the existing Transportation Utility.
- Revenues under this utility fee would be restricted for providing jail services.
- A COLA would be applied to the fee, like other City utility rates, but in this case, the first COLA would be applied January 1, 2018.

ITEM: 4.d. ORDINANCE AMENDING THE GRANTS PASS MUNICIPAL CODE BY ADDING CHAPTER 8.70 - JAIL SERVICES UTILITY FEE.

Staff Report (continued):

- Similar to the terms of the Transportation Utility Fee, school district facilities, county government, city government and special districts formed under Oregon Law as local government would be exempted from paying the fee provided facilities owned by these agencies are used for governmental purposes.
- The Jail Services Utility Fee shall be removed from applicable City utility bills, and the terms of this Chapter shall sunset at such time that Josephine County has sufficient and ongoing annual revenues and resources to operate the County's adult jail at a capacity that properly serves the City of Grants Pass and Josephine County's combined needs for jail services, as determined by the City Council. If no such service is realized, this Ordinance will expire June 30, 2017.

Exhibit "A" to this ordinance provides the full draft of the new Municipal Code Chapter 8.70 for the Jail Services Utility Fee.

COST IMPLICATION:

The cost of continuing renting beds in the Josephine County adult jail is an annual cost of $972,000. The Jail Services Utility Ordinance does not specify how jail services are to be provided, it merely restricts the revenues under this Utility Fee to be used for the provision or costs directly related to jail services.

ALTERNATIVES:

Council has the ability to approve the ordinance as written, amend the terms of the ordinance, or disapprove the ordinance and direct staff to provide other financial means to provide resources for the ongoing provision of jail services.

RECOMMENDED ACTION:

It is recommended the Council adopt this ordinance to provide for the financial resources to cover the ongoing costs of jail services. Without identifying the proper resources to cover these ongoing costs, the City's General Fund balance would be drawn down by the amount necessary to cover these contractual costs.

POTENTIAL MOTION:

I move to amend the Grants Pass Municipal Code by adding Chapter 8.70 Jail Services Utility Fee.

ORDINANCE NO.

AN ORDINANCE OF THE COUNCIL OF THE CITY OF GRANTS PASS AMENDING THE GRANTS PASS MUNICIPAL CODE BY ADDING CHAPTER 8.70 JAIL SERVICES UTILITY FEE.

WHEREAS:

1. Josephine County's resources to support the County's Criminal Justice Services, such as the adult jail, continue to be insufficient to effectively provide those services to the Grants Pass Department of Public Safety and the City's residents and visitors based on the City's need for those services; and

2. The City's temporary contract to rent jail beds in the Adult Jail to exclusively serve the City of Grants Pass Police Division is set to expire on June 30, 2016; and

3. The temporary rental of up to 28 beds in the Josephine County adult jail during Fiscal 2015 and Fiscal 2016 has increased safety in Grants Pass and the efficiency of the City's Police Division; and

4. Continued rental of beds exclusively for City Police use in the Josephine County Adult Jail could serve to help keep Grants Pass safe and can continue to increase the efficiency of City Police Division services; and

5. The Council has requested staff provide new language to the Municipal Code regarding a Jail Services Utility Fee that would be sufficient to continue providing the revenues for jail services needed for exclusive City public safety use; and

6. This ordinance should be adopted effective July 1, 2016 to prevent a lapse in current safety services and to provide the resources to continue supporting the rental of beds in the Josephine County adult jail.

NOW, THEREFORE, THE CITY OF GRANTS PASS HEREBY ORDAINS: The Grants Pass Municipal Code is hereby amended to add a new chapter 8.70 Jail Services Utility Fee as set forth in Exhibit "A" effective on July 1, 2016.

ADOPTED by the Council of the City of Grants Pass, Oregon, in regular session this 20th day April 2016 with the following specific roll call vote:

AYES:

NAYS: **ABSTAIN:** **ABSENT:**

SUBMITTED to and _____ by the Mayor of the City of Grants Pass, Oregon, this ____ day of April 2016.

_____
Darin Fowler, Mayor

ATTEST:

_____
Karen Frerk, City Recorder

Date submitted to Mayor: _____

Approved as to Form, Mark Bartholomew, City Attorney _____

"EXHIBIT A"

CHAPTER 8.70

JAIL SERVICES UTILITY FEE

Sections:

8.70.010	Title
8.70.020	Findings
8.70.030	Definitions
8.70.040	Creation of Utility Fee; Purpose
8.70.050	Administrative Officer Designated
8.70.060	Establishment and Revision of Jail Services Utility Fee
8.70.070	Jail Services Utility Fee Restricted for Use
8.70.080	Cost-of-Living Adjustment
8.70.090	Imposition of Jail Services Utility Fee
8.70.100	Principles of Categorization
8.70.110	Determination of Utility Fees
8.70.120	Appeals of Determination of Fee.
8.70.130	Billing and Collection of Jail Services Utility Fee
8.70.140	Recovery of Unpaid Charges
8.70.150	Exemptions
8.70.160	Utility Fee Sunset
8.70.170	Severability

8.70.010 Title

This Chapter shall be titled "Jail Services Utility Fee."

8.70.020 Findings

A. The Jail Services Utility Fee established herein is intended to assist the City in maintaining Public Safety and jail services that serve City residents and visitors, and to protect and enhance their health, safety and welfare.

B. The fee imposed in this Chapter is not a tax on property or on the property owner as a direct consequence of ownership of property within the meanings of Section II.b., Article XI of the Oregon Constitution or the legislation implementing that Section. The fee does not supplant any property tax based system as envisioned in Article XI of the Oregon Constitution.

C. If the Jail Services Utility Fee herein imposed is viewed under Section II.b., Article XI of the Oregon Constitution as a tax against property or against a property owner as a direct consequence of ownership of that property, it is an incurred charge with the meaning of that Section and the statutes implementing it because:

1. It allows the owner to control the quantity of the service by determining the extent of development to occur upon the property.
2. It allows the owner to determine when the service is to be initiated or increased by controlling when the development occurs.
3. State law and the ordinances of Grants Pass require the owner to provide certain basic services to the property when it is developed for human occupancy. The provision of these basic services is a routine obligation of the owner of the affected property and essential to the health and safety of the community.

D. Among the basic services required of every developed property are public safety and related criminal justice system services.

E. The fee imposed is based upon the actual cost of providing the required services.

F. The Jail Services Utility Fee is separate from and in addition to any applicable tax, assessment, charge, "fee-in-lieu-of" assessment, or fee otherwise provided by law or imposed as a condition of development.

G. In accordance with these findings, no public vote is required for the adoption of the Jail Services Utility Fee.

8.70.030 Definitions

The following definitions apply to this Chapter.

A. "City Manager" means the City Manager or the Manager's designate.

B. "Developed Property" means property on which improvements have been constructed. "Improvements" include but are not limited to buildings, parking lots, landscaping, and outside storage. Developed property owned, leased or rented by state and federal governments and other property that otherwise may be entitled to exemption from or deferral of ad valorem property taxation are subject to this fee unless specifically exempted in this Chapter or by City Council Resolution.

C. "Gross Square Footage" means the calculated gross floor area of all structures located on a site, measured along the exterior walls of such structures, including but not limited to enclosed courtyards, stairwells, and square footage on each level of multi-story structures.

D. "Incidental Uses" shall be any use which generates no more than 25% of the traffic to the building.

E. "ITE Manual" means Institute of Transportation Engineers Trip Generation Manual, latest edition.

F. "Public Water or Sewer System" means water and sewer systems that are owned and operated by a public agency.

G. "Responsible Party" means the person(s) who by usage, occupancy or contractual agreement is responsible for paying the utility bill for an improved premise or property or the owner of the property.

H. "Jail Services" include but are not limited to the operation of a jail facility, the rental of a jail facility, a contract with a jail operator to provide services to the City, or other services directly related to the operation of a jail facility.

I. "Trips" means average trips per day as reported in the ITE Manual.

8.70.040 Creation of Utility Fee: Purpose

The City Council hereby finds, determines and declares the necessity of providing for the continued operation of jail services that serve the City of Grants Pass and its residents and visitors. There is hereby created a Jail Services Utility Fee for the purpose of undertaking such activities as are necessary in order to maintain an effective criminal justice system that serves the City of Grants Pass.

8.70.050 Administrative Officer Designated

The City Manager shall be responsible for the administration of this Chapter. The City Manager shall be responsible for developing administrative procedures for the administration of the fees, developing programs, establishing standards for the operation of specific Public Safety services or contracts to provide jail services or criminal justice services that serve the City, and all other activities related to the purpose of the Jail Services Utility Fee.

8.70.060 Establishment and Revision of Jail Services Utility Fee

A. Establishment: A Jail Services Utility Fee is hereby established to be paid by the responsible party for each developed property within the corporate limits of the city and for each developed property within the urbanizing area that is subject to an annexation agreement signed after August 1, 2001. Developed property that is subject to an annexation agreement entered into prior to August 1, 2001 shall not be subject to this fee until such time as the property is annexed into the City of Grants Pass. Such fee shall not be imposed in amounts greater than authorized by law, to provide sufficient funds to properly maintain jail services that exclusively serve the City of Grants Pass.

B. Fees: Fees for individual properties shall be based upon the developed use of the property and shall follow the same calculation methodology as the City's Transportation Utility Fee, Chapter 8.60 of Municipal Code. Collection of the fee for each property shall be made by a monthly charge, which shall commence on the first day of July, 2016. If there is neither public water nor public sewer service to the improved property governed by this Code, a monthly bill shall be issued and shall become due and payable with 15 days of issuance.

8.70.070 Jail Services Utility Fee Restricted for Use

All fees collected by the City under the Jail Services Utility Fee shall be restricted for use in providing for such Jail Services. To the extent that the fees collected are insufficient to properly maintain a jail services contract or to operate and maintain a jail facility for City use, the cost of the same may be paid from such other City funds as may be determined by the City Council, but the City Council may order reimbursement to such jail services fund if additional fees are thereafter collected.

8.70.080 Cost-of-Living Adjustment

Notwithstanding any cost-of-living increase provisions to the contrary or absence thereof, fee rates for jail services shall be increased annually on January 1st of each year beginning January 1, 2018. Any prior cost-of-living increases shall be incorporated in the charges prior to calculating the updated charges.

The cost-of-living increase shall be determined by averaging the 12 month cost-of-living figures beginning with the immediately previous October and averaging it with the prior 11 months. The cost-of-living figures noted herein shall be the U.S. Bureau of Labor and Statistics, Cost-of-Living Index, CPI-U, All Cities publication for each month, November through October.

8.70.090 Imposition of Jail Services Utility Fee

There is hereby imposed upon the responsible party for each and every developed lot or parcel of land within the City that uses City streets, water, or sewer service, a Jail Services Utility Fee billed monthly. For all residential uses, the fee shall be a set monthly fee, depending on the use and number of dwelling

units of the building. All commercial /industrial uses shall pay a fee based on the category of the use, the size of the building and the rate per group. These categories and rates shall be adopted by resolution. This fee is deemed reasonable and is necessary to pay for the operation or rental of jail facilities for City use.

The categories of development for the administration of the Jail Services Utility Charge shall match the categories, description, and calculation methodology maintained in Chapter 8.60 Transportation Utility Fee and are as follows:

A. Single Family Residential
B. Multi-family Residential
C. Condominium and Mobile Home Park
D. Elderly Care Facilities
E. Major Home Occupation
F. General Office
G. Medical Office
H. Hospital
I. Minor Traffic Retail/Commercial
J. General Retail/Commercial
K. Moderate Traffic Retail/Commercial
L. High Traffic Retail/Commercial
M. Automobile Sales
N. Hotel/Motel
O. Non-Profit
P. Industrial

8.70.100 Principles of Categorization

Each building is categorized based on the methodology established in Chapter and Section 8.60.100 of the Transportation Utility Fee Ordinance.

8.70.110 Determination of Utility Fee

The City Manager shall determine the fee for each utility account in accordance with the group designation as set forth in Table A, Chapter 8.60 of the Transportation Utility Fee Ordinance. The group designation is based on:

A. The categories of use which shall be assigned according to the principles and definitions contained in this Code and includes uses which generate similar amount of traffic based on the ITE Manual.

B. The size of the building measured by the gross square footage of the development.

8.70.120 Appeals of Determination of Fee

A. Appeal Petition: Any responsible party who disputes the classification of the use of the property or the gross square footage, may petition the City Council for reclassification of the use or alteration of the gross square footage. An appeal of a decision regarding the determination of the

category of use or the gross square footage shall be filed in writing with the City Manager within 45 days after the mailing of the first utility bill that is sent following any initial classification or any new classification. Such petitions may be made only once in connection with any specific fee or determination, except upon showing of changed circumstances.

B. Burden of Proof: The petitioner shall have the burden of proof. For a dispute of the classification, the petitioner must demonstrate the category was not the best fit as defined in this Code. For a dispute of the size, the petitioner must demonstrate the gross square footage of the building was incorrect.

C. Decision: Within 45 days of the filing of a petition under this Section, the City Council shall make findings of fact based upon relevant information, shall make a determination based upon such findings, and if found appropriate, shall modify such fee or determination accordingly. Such determination by the City Council shall be considered a final order. Every decision or determination by the City Council in response to a written petition shall be in writing, and notice thereof shall be mailed or served upon the petitioner within a reasonable time from the date of such action.

D. Continued Payment: During the appeal, the petitioner is responsible for payment of the assessed Jail Services Utility Fee. If it is determined the assessed fee was too high, a credit shall be provided for the charges.

8.70.130 Billing and Collection of Jail Services Utility Fee

A. Responsible Party: The responsible party for any improved premises governed by this Code shall pay a monthly Jail Services Utility Fee according to the rates set forth in this Chapter and the rates set by Council resolution. The person(s) paying the public water (or public sewer if only sewer service is provided) utility charges shall pay the Jail Services Utility Fees. If there is no public water or sewer service to the property, the Jail Services Utility Fees shall be paid by the persons having the right to occupy the property.

B. Commencement: Jail Services Utility Fee for new development will commence upon connection to the public water or sewer system, or completion, occupancy or use of the improvements, whichever comes first. Areas that are annexed to the City or under contract to annex shall become subject to the Jail Services Utility Fee on the date of annexation or the date of the annexation contract, whichever comes first. When it is determined the customer was eligible to be billed for the Jail Services Utility Fee, but never billed, the customer will be billed retroactively for each respective month for which they were eligible to be billed. There will be no limitation to period of time.

C. Unified Billing: The Jail Services Utility Fee shall be billed and collected by the City in the same manner and at the same time as water and sewer user service charges. Partial payments on utility bills shall be allocated first to the transportation charge, second to the jail services charge, third

to the water charge and fourth to the sewer charge. The customer shall not be allowed to specify a different allocation.

D. Monthly Bills: Bills will be rendered monthly. Opening or closing bills, or bills that for any other reason cover a period of time more or less than the normal billing period, shall be prorated.

E. Delinquent Accounts: An account is delinquent fifteen (15) calendar days after the date of the mailing of the bill. After an account, billed for water service as well as the Jail Services Utility, has become delinquent, it will receive written notice of the delinquency and be subject to service charges and water service discontinuation pursuant to the Municipal Code. Where the Jail Services Utility fees have become delinquent, an interest charge may be added to the unpaid balance, at a rate to be set by resolution.

F. Vacancy Credits;

1. **Residential** and **Multifamily** customers who anticipate being absent from the community for 30 or more consecutive days, can apply for a vacancy credit. A separate written application must be made to the City for each 30-day period the customer is absent from the community. Vacancy credit application for extended planned absences may be made in advance for a period no longer than 120 days.

2. **Residential Properties for Sale or Rent** may make application for vacancy credit. Application must be made for each 30 or more consecutive day period of vacancy.

3. **Commercial and Industrial** customers may make application for vacancy credit for an entire building or any separate business within the building, which will not be used. An application must be made to the City for each 30 or more consecutive day period the premise is vacant. During the vacancy, there can be no use of the property, buildings or portion of the buildings on the property for which the vacancy credit is applied. The City reserves the right to inspect the premises or verify the customer is entitled to the credit.

4. **All Vacancy Credits** are limited to a retroactive period of no more than two (2) billing periods if proof of vacancy during this period is provided in writing with the application.

8.70.140 Recovery of Unpaid Charges

A. Non-Payment Accounts: Non-payment of the Jail Services Utility Fee and any associated fees may be assigned to a collection agency and, if the City elects to do so, then a collection fee may be charged which shall be set by resolution.

B. Recovery: Any Jail Services Utility Fee which is not paid when due may be recovered from the responsible party in an action at law by the City. In

addition to any other remedies or penalties provided by this or any other provision of the Municipal Code, failure of any user of the City utilities governed by this Code to pay said charges promptly when due shall subject such user to measures as may be appropriate to obtain payment, and the City Manager is hereby empowered and directed to enforce this provision against delinquent users.

C. Enforcement: The employees of the City shall, at all reasonable times, have access to any premises served by the City for inspection for compliance with this Chapter.

8.70.150 Exemptions

The City Council may, by resolution, exempt any class of user when it determines the public interest deems it necessary.

The City will exempt school district, county government, city government and special districts formed under Oregon Law as local government, or any Chapter 190 combination governmental entity controlled by local governments, from paying a Jail Services Utility Fee for facilities owner/leased and operated by said entities provided such facilities are used for governmental purposes.

8.70.160 Utility Fee Sunset

The Jail Services Utility Fee shall be removed from applicable City utility bills, and the terms of this Chapter shall sunset at such time that Josephine County has sufficient and ongoing annual revenues and resources to operate the County's adult jail at a capacity that properly serves the City of Grants Pass and Josephine County's combined needs for jail services, as determined by the City Council and if no such service is realized, this Ordinance will expire June 30, 2017.

8.70.170 Severability

In the event any section, subsection, paragraph, sentence or phrase of this Chapter is determined by a court of competent jurisdiction to be invalid or unenforceable, the validity of the remainder of the Chapter shall continue to be effective.

Item: Resolution adding Jail Services Utility Fees in the Comprehensive Fee Schedule. Date: April 20, 2016

SUBJECT AND SUMMARY:

This resolution would establish the Jail Services Utility Fee rates under the Jail Services Utility Fee Ordinance.

RELATIONSHIP TO COUNCIL GOALS:

This supports Council's goal to **KEEP CITIZENS SAFE** by providing jail services that are needed for effective and efficient law enforcement services.

CALL TO ACTION SCHEDULE:

Call to action schedule: By the end of May 2016.

BACKGROUND:

For the last four years, Josephine County has had insufficient resources to provide criminal justice programs, such as jail services, on a countywide basis. The City's Police Division relies on these services, as do other law enforcement agencies that serve throughout the County. The City's Police Division needs these services to provide efficient and effective law enforcement services. The City and County entered into a short-term contract in each of the last three fiscal years to rent up to 28-30 jail beds for exclusive use by the Grants Pass Police Division. A contract extension for next fiscal year (FY'17) has already been signed at the same annual cost as the last two fiscal years of $972,000 for the full fiscal year.

The Jail Services Utility Fee rates in the attached resolution would provide the revenue to cover the full jail services contract cost in the next fiscal year and this is the revenue source that will keep the City's general fund budget well balanced next fiscal year with the continuation of this jail services contract. This fee structure would provide estimated annual revenues of $972,000, starting on July 1, 2016, in order to continue renting jail beds for City use similar to the level of jail beds used during the previous three fiscal years.

The calculation method, administration, and most other Municipal Code terms are modeled after the City's existing Transportation Utility Fee Ordinance. Fees are set separately by resolution. The Jail Services Utility Ordinance makes reference to the fee categories in the Transportation Utility Fee Ordinance. The utility fee category and calculation methodology is largely based on trips like the existing Transportation Utility. This is a good indicator of the level of activity in residential and commercial areas and the need for law enforcement services in these areas.

Revenues under this utility fee would be restricted for providing jail services. A COLA would be applied to the fees, like other City utility rates, but in this case the first COLA would be applied January 1, 2018 (not in the first year of administering this specific fee). Based on current

Staff Report (continued):

accounts in the City's utility billing system, the comprehensive fee schedule and monthly City utility bills would be adjusted in the following amounts:

JAIL SERVICES UTILITY RATES (monthly)			Number of Current City Accounts
Single Family Residential	$	3.58	
Multi-family Residential (per living unit)	$	2.40	
Condominiums, Mobile Home Park (per living unit)	$	1.79	
Elder Care Facilities (per bed)	$	0.90	
Major Home Occupation	$	3.58	
Total Residential Accounts			11,370
Commercial/Industrial Usage Rates (these rates vary by size and type of business; see schedule for detail)			
A	$	11.93	1,197 accounts
B	$	35.76	97
C	$	71.54	33
D	$	107.33	10
E	$	178.87	1 account
F	$	357.75	2 accounts
G	$	715.50	1 account
H	$	1,073.26	2 accounts

COST IMPLICATION:

The cost of continuing renting beds in the Josephine County adult jail is an annual cost of $972,000. The Jail Services Utility Ordinance does not specify how jail services are to be provided, it merely restricts the revenues under this Utility Fee to be used for the provision or costs directly related to jail services.

ALTERNATIVES:

- Council can approve this resolution with monthly fees as proposed to fully fund the cost of continuing jail services at the current level;
- Change the fee rates to target the level of service or resources desired under the utility fee; or
- Disapprove the resolution and find another way to provide resources to cover next fiscal year's jail services contract cost of $972,000.

RECOMMENDED ACTION:

It is recommended the Council adopt this resolution to provide for the financial resources to cover the ongoing costs of jail services. Without identifying the proper resources to cover these ongoing costs, the City's General Fund balance would be drawn down by the amount necessary to cover these contractual costs.

POTENTIAL MOTION:

I move to adopt the resolution adding Jail Services Utility Fees in the Comprehensive Fee Schedule.

RESOLUTION NO.

A RESOLUTION OF THE COUNCIL OF THE CITY OF GRANTS PASS ADDING JAIL SERVICES UTILITY FEES IN THE COMPREHENSIVE FEE SCHEDULE.

WHEREAS:

1. The City of Grants Pass finds it necessary and reasonable to adopt fees in order to provide City services; and

2. The City Council has the authority to establish, amend, and update fees and charges imposed by the City; and

3. The City has previously adopted many fees and charges through: 1) changes to the City Code, 2) through Ordinances, 3) by various Resolutions, 4) other means; and

4. It should be understood that these fees and charges are an important part of the resources required for the operation of the City, and in many cases do not cover the costs involved; and

5. Staff has reviewed City fees and charges imposed by the City and has compiled these fees and charges into a comprehensive fee schedule; and

6. It is desirable to improve the City's ability to communicate its fees and charges to its citizens and customers through a consolidated schedule; and

7. There is a need to provide additional funding for the provision of jail services that serve the City's Police Division and the City's residents and visitors; and

8. The City will be better able to manage and track the City's fees and charges through the use of a comprehensive fee schedule with regular amendments as needed.

NOW, THEREFORE, BE IT RESOLVED by the Council of the City of Grants Pass:

Section 1. The comprehensive fee schedule is amended to include changes to fees as follows:

JAIL SERVICES UTILITY RATES (monthly)		
Single Family Residential	$	3.58
Multi-family Residential (per living unit)	$	2.40
Condominiums, Mobile Home Park (per living unit)	$	1.79
Elder Care Facilities (per bed)	$	0.90
Major Home Occupation	$	3.58
Commercial/Industrial Usage Rates (these rates vary by size and type of business; see schedule for detail)		
A	$	11.93
B	$	35.76
C	$	71.54
D	$	107.33
E	$	178.87
F	$	357.75
G	$	715.50
H	$	1,073.26

Section 2. The Jail Services Utility Fee rates shall be adjusted by a Cost-of-Living index on January 1st of each year beginning January 1, 2018. The cost-of-living increase shall be determined by averaging the 12-month cost-of-living figures beginning with the immediately previous October and averaging it with the prior 11 months. The cost-of-living figures noted herein shall be the U.S. Bureau of Labor and Statistics, Cost-of-Living Index, CPI-U, All Cities publication for each month, November through October.

Section 3. The added fees and charges included in the comprehensive fee schedule are effective for all City utility billings beginning July 1, 2016.

EFFECTIVE DATE of this Resolution shall be immediate upon its passage by the City Council and approval by the Mayor.

ADOPTED by the Council of the City of Grants Pass, Oregon, in regular session this 20th day of April, 2016.

SUBMITTED to and _____ by the Mayor of the City of Grants Pass, Oregon, this ____ day of April 2016.

_____
Darin Fowler, Mayor

ATTEST:

_____ Date submitted to Mayor: _____
Karen Frerk, City Recorder

Approved as to Form, Mark Bartholomew, City Attorney _____

Item: Resolution authorizing the City Manager to amend the franchise agreement with Republic Services. Date: April 20, 2016

SUBJECT AND SUMMARY:

Republic Services filed a formal request to amend the franchise agreement for the expansion of their Yard Waste Program.

RELATIONSHIP TO COUNCIL GOALS:

This supports Council's goal of **LEADERSHIP** by following the rules laid out in the franchise agreement.

CALL TO ACTION SCHEDULE:

Call to action schedule: April 20, 2016.

BACKGROUND:

On March 15, 2016, Republic Services filed a formal request with the Solid Waste Agency for the expansion of their Yard Waste Program, which would result in a rate increase for solid waste to all customers within Republic Services service area. Per the Solid Waste Agency Intergovernmental Agreement, the Agency heard the request at a public meeting to receive public comment, and ultimately recommended approval of the increase.

The following documents are attached:

- Republic Services Yard Waste Proposal
- Minutes March 15, 2016 Solid Waste Agency meeting
- Rate Proposal

Based upon the Solid Waste Agency Intergovernmental Agreement, each of the three governing bodies shall review the recommendation and determine whether to allow, disallow, or modify the recommendation of the Agency within 60 days. If no action is taken by the governing body within 60 days, the recommended rate schedule shall become effective unless and until rescinded by the governing body.

COST IMPLICATION:

If the resolution is approved, the City of Grants Pass customers served by Republic Services will see a rate increase of 0.12% (in accordance with the CPIU) plus an increase of $3.30/mo for implementation of a service-area-wide yard debris recycling program.

ITEM: 4.f. RESOLUTION AUTHORIZING THE CITY MANAGER TO AMEND THE FRANCHISE AGREEMENT WITH REPUBLIC SERVICES.

Staff Report (continued):

ALTERNATIVES:

Council can choose to approve the proposed amendment to the franchise agreement; or

Council can deny the current proposal and request an alternate proposal to be presented.

RECOMMENDED ACTION:

The Solid Waste Agency has recommended the Council approve the proposed rate increase from Republic Services.

POTENTIAL MOTION:

I move to approve the resolution authorizing the City Manager to amend the franchise agreement with Republic Services.

RESOLUTION NO.

A RESOLUTION OF THE COUNCIL OF THE CITY OF GRANTS PASS AUTHORIZING THE CITY MANAGER TO AMEND THE FRANCHISE AGREEMENT WITH REPUBLIC SERVICES.

WHEREAS:

1. The City of Grants Pass, City of Cave Junction and Josephine County have formed a Solid Waste Agency via an Intergovernmental Agreement; and

2. The Agency is empowered to administer the franchise agreements between the three jurisdictions and the two franchise haulers of solid waste in the county; and

3. Republic Services has requested a rate increase which has been recommended for approval by the governing bodies of the three jurisdictions.

NOW, THEREFORE, BE IT RESOLVED by the Council of the City of Grants Pass the City Manager is authorized to amend the Republic Services Solid Waste Collection Franchise Agreement with the new rate schedule as set out in Exhibit 'A' as attached to this resolution.

EFFECTIVE DATE of this Resolution shall be immediate upon its passage by the City Council and approval by the Mayor.

ADOPTED by the Council of the City of Grants Pass, Oregon, in regular session this 20th day of April, 2016.

SUBMITTED to and _____ by the Mayor of the City of Grants Pass, Oregon, this ____ day of April, 2016 to be effective on the date indicated as adopted by the City Council.

_____
Darin Fowler, Mayor

ATTEST:

_____
Karen Frerk, City Recorder

Date submitted to Mayor: _____

Approved as to Form, Mark Bartholomew, City Attorney _____

EXHIBIT A

REPUBLIC SERVICES

City of Grants Pass
City Yard Waste Proposal

Republic Services of Grants Pass two year margin has fallen below the 9% franchise threshold to 7.9% and now qualifies for the full rate adjustment review process as described in section 6.1 of the Solid Waste Agreement.

Increasing disposal and labor costs, an aging fleet and facilities repairs have continued to erode our margins. While revenue has risen 14.5% over the last five years, over 12.8% in just the last three years, our cost of doing business, our operation costs, have also risen but disproportionately so. In the last five years our operation costs have risen over 22%. These costs break down as follows:

- Republic Services of Grants Pass largest cost is disposal and every year since 2000, we have received a CPI increase from Dry Creek Landfill and we were recently notified that Dry Creek Landfill will be passing on a recent DEQ mandated increase.
- Compensation for our people has always been a top priority for Republic Services of Grants Pass. Our labor costs have seen a steady increase year over year. Over the last five years labor costs have risen over 33%.
- Our average fleet and equipment age is 13 years old. Maintenance, repair and replacement of this equipment will continue to be a priority. As a combined total of our hauling and transfer station operations our maintenance costs have risen 68% over the last five years and 170% as compared to 10 Years ago. As part of our "One Fleet" fleet program, Republic ensures our equipment is maintained at the highest of standards but as you can see; as the fleet gets older the costs of maintenance will continue to rise. Because of this Republic Services has replaced two units this year and plan on reinvesting $2.3 million dollars into 15 units over the next 3 to 5 years.
- Having a well maintained facility is essential for the safety and security of our customers and our employees. As our facilities age we have continued to see our costs rise 37% over the last five years.

Rather than just increase prices, Republic Services is proposing a value added service. A City wide yard debris program will not only help reduce the costs and risks associated with our current yard waste programs, it will be a more consistent, efficient and sustainable program.

Our current yard debris collection consists of two programs. First, our season leaf collection which requires the franchisee to collect and dispose of all yard debris placed at the curb in black plastic bags. This program allows all residents within the City limits, whether paying customers or not, to participate in the collection program. There are significant operational costs and risks associated with this program and these costs continue to rise. In fact, during several years Republic Services and Southern Oregon Sanitation contracted with Southern Oregon Aspire to conduct leaf collection. In 2014, SO Aspire declined to continue the service because of the injuries to their employees. Since then, Republic Services has had several injuries associated with leaf collection and debagging.

Republic Services is asking that the City of Grants Pass to approve a CPI adjustment in conjunction with the proposed new Yard Waste Program as attached.

Exhibit '1'

City of Grants Pass
Yard Waste Program

- This yard waste program will replace section 3.5.2 of the franchise agreement between the City of Grants Pass and Grants Pass Sanitation dba Republic Services of Grants Pass and the subscription yard waste program.

- This new service will increase all residential customers $3.30 per month to exclude "On Call Service" unless requested.

- Within the City of Grants Pass and Urban Growth Boundary, Republic Services of Grants Pass will offer a yard waste cart to all single family residential customers with weekly service. All multi-family units such as duplexes up to apartment complexes and mobile home parks will be offered one cart. Multi-family units as well as single family dwellings can request an additional cart for an additional $3.30 per month fee.

- All yard waste carts will be serviced every other week on a regular schedule to be determined by the contractor.

- Republic Services shall increase yard debris collection frequency to weekly for three weeks during the Spring (April and May) and for six weeks during Fall/Winter (November and December) and shall exclude Thanksgiving week.

- Extra bags must be of paper construction. Plastic bags will not be accepted as yard debris. An extra charge of 25¢ per bag will charged to the customer for any extra bags. Customers that place plastic bags out for yard debris will be notified that they cannot be accepted as yard debris and will be given the option to have them removed as trash, to dispose of them over time in there provided cart or re-bag them in paper bags.

- The projected start time of this new service will be eight weeks from City Council approval.

- New rates will go into effect eight weeks from City Council approval.

Exhibit '2'

City of Grants Pass Residential Rates								
	Charges per Month		Current	PI %		New Rate		Proposed New Rate
	32/35 Gallon Container	$	14.70	0.12%	$	14.71745	$	18.00
	65 Gallon Container	$	25.60	0.12%	$	25.63039	$	28.95
	95 Gallon Container	$	36.55	0.12%	$	36.59338	$	39.90
	Each Additional Container	$	10.90	0.12%	$	10.91294	$	10.90
Call In	35 Gallon Cart	$	5.95	0.12%	$	5.95706	$	5.95
	35 Gallon Cart Rent	$	1.00	0.12%	$	1.00119	$	1.00
	65/95 Gallon Cart	$	9.25	0.12%	$	9.26098	$	9.25
	65/95 Gallon Cart Rent	$	2.05	0.12%	$	2.05243	$	2.05
Mobile Home Park	35 Gallon Container	$	9.15	0.12%	$	9.16086	$	9.15
	Each Additional Container	$	9.15	0.12%	$	9.16086	$	9.15
	Each Extra Bag or Container	$	3.05	0.12%	$	3.05362	$	3.05
Miscellanneous Charges	Each Extra Bag or Container	$	3.05	0.12%	$	3.05362	$	3.05
	Off Day Pickup of Containers	$	7.80	0.12%	$	7.80926	$	7.80
	Call Back	$	5.10	0.12%	$	5.10605	$	5.10
	Container Re-Delivery Fee	$	7.60	0.12%	$	7.60902	$	7.60
	Cart Replacement Fee	$	53.35	0.12%	$	53.41333	$	53.40
	Restart Fee On Delinquent Accounts	$	25.40	0.12%	$	25.43015	$	25.45
	Commingle Recycling Contamination Fee	$	20.00	0.12%	$	20.02374	$	20.00
	Valet Service Fee	$	8.15	0.12%	$	8.15967	$	8.15
Miscellaneous Services	Mattresses, Box Spring	$	15.25	0.12%	$	15.26810	$	15.25
	Stoves, Ranges, Washer & Dryers	$	12.20	0.12%	$	12.21448	$	12.20
	Passenger Tires - Plus Disposal	$	5.10	0.12%	$	5.10605	$	5.10
	Passenger Tires with Rim - Plus Disposal	$	8.15	0.12%	$	8.15967	$	8.15
	Truck Tires - Plus Disposal	$	12.20	0.12%	$	12.21448	$	12.20
	Truck Tires with Rim - Plus Disposal	$	18.30	0.12%	$	18.32172	$	18.30
	Furniture, Small Appliancees, Carpet, Etc.	$	12.20	0.12%	$	12.21448	$	12.20
	Recycle Only - Per Month	$	4.55	0.12%	$	4.55540	$	4.55

Grants Pass Service Increase/Price Increase Options

4/2016

Republic Services is requesting the addition of a non-subscription yard debris program within the city and believes the fair financial option is to increase residential service by $3.30 per month, providing an increased service level to those customers.

Current Program

- Subscription yard debris service @ $5.40 per household
- 9 week bagged leaf collection (6 weeks in fall & 3 weeks in spring)
- All other yard waste goes to landfill

OBSTACLES:

- Leaf collection cost is rising faster than inflation.
- Risks associated with collecting and de-bagging leaves by hand.
- Seasonal "leaf season" is unpredictable
- Yard waste goes in trash for most of year.

COST:

$5.40 per household

Option 1: New Yard Debris Program

- Curbside yard debris service for all residential customers @ $3.30 per household
- Free leaf drop off event at JoGro during fall
- Year-round yard waste collection in safe and efficient automated truck.
- Customers may opt for on-call service without yard debris at no additional cost.

BENEFITS:

- Leaf collection is convenient for customers.
- Composted yard waste closes the loop and creates a benficial soil amendment.
- Leaves stay out of bike lanes and storm drains.
- Higher recovery rate for Josephine County.
- Customers can downsize trash cart & cost.
- 20% of current customers will save $2.10.
- Service increase does not require full review or across the board margin increase, allowing smaller CPI increases instead.

COST:

$3.30 per household

Option 2: Full Rate Review

OBSTACLES:

- This process requires full Republic Services financial review.
- Hauling Company increase to get to 11% equals 9-10% increase across the board.
- Does ***not*** include curbside yard debris program.

COST:

EXAMPLES (assumes 9.5% increase)

- Residential Increase: $1.40 - $3.50 per household, depending on cart size
- Commercial Increase: $2.20 - $129.15 per container, depending size
- Industrial Increase: $18.30 – $84.70 per service of container, depending on size

REPUBLIC SERVICES

"Of the 29 cities in Oregon with a population over 20,000, 20 have regular curbside yard debris collection."

Peter Spendelow, Oregon DEQ

Solid Waste Agency 101 NW A Street Grants Pass OR 97526 541-450-6110 fax 541-479-6765

Josephine County
Solid Waste Agency

JOSEPHINE COUNTY / CITY OF GRANTS PASS
SOLID WASTE AGENCY
MEETING MINUTES
March 15, 2016

Meeting convened at 3:04 P.M.

Agency Board Members Present:

Rob Brandes
Connie Roach
Lora Glover
Rick Riker
Brad Carlson
Dave Reeves (Arrived at 3:23 P.M.)

Agency Board Members Absent:

Mike Bollweg

Others: Don Moss, General Manager, Republic Services
Julie Jackson, Assistant, Republic Services
Shea Sigafous, Southern Oregon Sanitation
Trent Carpenter, Operations manager, Southern Oregon Sanitation
Scott Lindberg, City of Grants Pass Grants Specialist

Staff: Jason Canady, Operations Officer
Linda Gay, Minute Recorder

Rob Brandes called the meeting to order at 3:05 p.m. There was a quorum and the meeting proceeded.

1. **Approval of minutes from February 16, 2016 meeting.** Connie Roach made a motion to approve the February 16, 2016 meeting minutes. Lora Glover seconded the motion. Motion approved 5 - 0.

Solid Waste Agency 101 NW A Street Grants Pass OR 97526 541-450-6110 fax 541-479-6765

2. **Kerby Landfill Cap Restoration update - Rob Brandes**
Rob stated the project is moving forward and is considering using Biosolids from the City of Grants Pass and having Republic Services haul to the site instead of the regular hauling place, Dry Creek Landfill, which would be a viable economical resource. The Department of Environmental Quality is expected to give approval for covering all of the area instead of just a portion as first thought, although there are still a few areas that are continuing in settling. The plan is to cover an acre to seven-acre area and Rob feels that Republic Services would be a good option for delivery of the Biosolids. Don Moss explained that there is a lot of engineering involved and they are all working in conjunction with Jan Stuber from Eugene Republic Services to get the Cap covered with a mix of good soil and Biosolids. Jason mentioned that the City now has Class C Biosolids product and Don stated then the Biosolids will need to be stored longer before use. Rob stated that if we store the Biosolids before we use them, they would need to be secured from any type of vandalism.

Rob stated that there would be much discussion as to how much of the cap is to be covered and what is best to use in the mix for the cap. Jason questioned as to what agency would be handling the permit and cost if they want the City of Grants Pass' Biosolids at a Class B, it would cost the City a few more thousand dollars a month to bring the solids up from a Class C in order to get the temperature up.

3. **Republic Services presents their Annual Report –Don Moss**
Don presented Republic Services' Annual Report and discussed reasons behind the upcoming requests for rate increases. Don stated there has been a rise in operating expenses, such as labor costs, hauling costs, equipment and maintenance costs. Don then stated that based on Section 6.1 of the City and the County Solid Waste Agreements, Republic Services qualifies for a full rate adjustment. Don stated it has been over 10 years since Republic Services has increased any rates.

Don stated they reinvest the revenue back into the company and he mentioned that in Section 3.9.1 of the Franchise Agreement it states that all equipment shall be kept well painted and properly maintained and be in good condition. Republic Services is planning to update their equipment spread out costs over the next three to five years. Don stated that the average time of use for the equipment is around 13 years. The company will determine if some equipment can be repaired or if it will need to be replaced.

Josephine County Recycle Program & Vegetative Waste program expansion update

Don stated that Republic Services wants to have the same Recycling program and franchise rates that Southern Oregon Sanitation currently has in place. Julie said that since there has not been recycling services before in the County, Republic Services is working on education programs for its customers along with heavy advertising. Julie stated that they have over 100 people per day to visit the Recycling/Transfer Center in the Merlin area. With this information, Julie said that people want to recycle and that City already has 80% of its customer base that are currently recycling, so the Recycling program would be a perfect fit.

Solid Waste Agency 101 NW A Street Grants Pass OR 97526 541-450-6110 fax 541-479-6765

For customers that are on a fixed income or people that do not generate a lot of trash there will be an "On-Call" recycling option. These people want to recycle and do not need to be subscribers; they just call in when their recycle can is full.

Republic Services is looking to implement a City Yard Debris Program with a general CPIU (Consumer Price Index for Urban Consumers) increase for the program in the City and an increase for the County to match Southern Oregon Sanitation rates. The rate is $3.30 increase for all residents within the City of Grants Pass for the Yard Debris Program. Republic Services wants to control costs and improve efficiency. There are two components to this program, the subscription program and leaf collection program. The subscription program will stay the same, the leaf program will change from the using the black plastic bags to using a 95-gallon can, and any extra bags for pick up will cost .25 cents.

Republic Services partners and supports several community projects. They also develop educational recycling programs and create informative flyers. Julie stated that Republic Services is updating their website and would like any City or County thoughts or suggestions to make it more user friendly and informational.

After the presentation by Republic Services Rob stated they should mention all the community projects and support, so the community can see where some of the revenue is spent. In addition, mentioning such projects as the Marlsan Cap, the upcoming Kerby Cap Restoration, the school renovations, and the Environmental Protection Fund costs.

The Board has given recommendations of approval for past presenters prior to going before City Council. The Board would like to recommend the proposal that Don presented, but suggested presenting at the City Council Workshop first, prior to City Council. Dave Reeves heard and acknowledged the two presentation requests and made a motion to support both the request for the City and the one for the County and he recommended that Republic Services proceed and move forward with the requests to their respective Boards for approval. Lora Glover seconded the motion. Motion approved 6 - 0.

4. **Other Business-**

Budget project list – Jason Canady

Jason Canady, Public Works Director handed out a copy of the project list for the last couple of years with updated numbers for Code Enforcement. Jason explained that not all listed projected projects were expended, but is inquiring the Board if they knew of any additional projects to be added before the Budget is to be adapted.

Cave Junction tire date for 2016 – Not discussed

5. **Agenda building for next meeting – April 19, 2016**
   - Budget Committee
   - Kerby Landfill Cap Restoration update

Solid Waste Agency 101 NW A Street Grants Pass OR 97526 541-450-6110 fax 541-479-6765

- Southern Oregon Sanitation Annual Report

Adjourn 4:03 p.m.

UPCOMING EVENTS:
Master Recycler Class – March 9 through May 4, 2016
Spring Leaf Collection – April 14 – May 2, 2014
Earth Day Spring Cleanup – April 23, 2014
Spring Burn Window – April 16 – 24, 2016
Prescription Drug Take Back – April 30, 2016
Wildfire Community Preparedness Day – May 7, 2016