Michael Dadik
igital instead of hand
written signature
12:38:37 2014.06.12
'00'07-

STRUCTURAL
REGISTERED PROFESSIONAL
ENGINEER
85742
OREGON
SEP 13, 2011
MICHAEL E. DADIK

EXPIRES: 12/31/15

CITY OF GRANTS PASS

TECHNICAL MEMORANDUM NO. 6

Water Restoration Plant Facility Plan

Seismic Assessment

FINAL
March 2013

CITY OF GRANTS PASS

WATER RESTORATION PLANT FACILITY PLAN

TECHNICAL MEMORANDUM NO. 6

SEISMIC ASSESSMENT

TABLE OF CONTENTS

Page No.

1.0 PURPOSE 1

2.0 SUMMARY OF FINDINGS 1

3.0 BACKGROUND 2

4.0 SEISMIC ASSESSMENT APPROACH 4
- 4.1 Assessment of Building-Type Structures 4
- 4.2 Buried/Semi-buried Concrete Structures 5
- 4.3 Performance Objectives 5
- 4.4 Geotechnical Review 7
- 4.5 Seismic Design Parameters 7

5.0 SEISMIC ASSESSMENT RESULTS 7
- 5.1 Masonry Buildings with Flexible Diaphragms 7
- 5.2 Light Wood Frame Buildings 15
- 5.3 Buried/Semi-Buried Concrete Structures 16
- 5.4 Concrete Condition Evaluation 20

6.0 CONSTRUCTION COST ESTIMATES 21

7.0 PRIORITIZATION 21

LIST OF APPENDICES

Appendix A - ASCE 31-03 Structural Evaluation Checklists
Appendix B - Conceptual Retrofit Design Sketches
Appendix C - Construction Cost Estimates
Appendix D - Selected Photographs

LIST OF TABLES

Table 1 Performance Levels for Seismic Evaluation 6
Table 2 Summary of Findings for Masonry Buildings with Flexible Diaphragms 8
Table 3 Summary of Findings for Light Frame Buildings 15
Table 4 Summary of Findings for Buried/Semi-Buried Concrete Structures..... 17
Table 5 Cost Estimates..... 22
Table 6 Prioritization 23

LIST OF FIGURES

Figure 1 Site Plan..... 3

1.0 PURPOSE

Due to the age of the existing structures at the Water Restoration Plant (WRP), there is potential a major upgrade could trigger significant structural modifications to increase reliability and address life safety concerns considering the current building code level of seismic forces. Since these upgrades could impact both capital improvements and evaluation of various alternatives, a Tier 1 seismic assessment was performed as part of the WRP Facilities Plan. This Technical Memorandum (TM) presents the findings, conceptual retrofit solutions, and associated planning level costs to address the main structural deficiencies.

2.0 SUMMARY OF FINDINGS

Based on the evaluations performed, several structures at the WRP do not meet the Life Safety Level performance objective as defined by American Society of Civil Engineers Standard 31 (ASCE 31-03). Retrofit actions are recommended to mitigate the seismic deficiencies and allow the buildings to meet the adopted Immediate Occupancy performance objective. Key findings and recommendations are as follows:

- The masonry buildings, including the Operations Building, Digester Control Building, Headworks Electrical Building, Plant Drain Pump Station, and Chlorine Building, exhibit seismic deficiencies, especially in the diaphragm connections and roof-to-wall anchorage connections. Retrofitting these buildings by strengthening and reinforcing the connections will reduce the risk of wall or roof collapse.

- Two knockout walls constructed in the Aeration Basins are significantly under-reinforced for the lateral soil and seismic loads. If the basins are not expanded by removing the knockout walls, strengthening these walls with new cast-in-place concrete walls with the appropriate reinforcing is critical to continuous operation of the basins after an earthquake.

- The brick veneer installed on the façade of the Operations and Digester Control buildings is not anchored to the structural walls. Additionally, the through-wall flashing installed at the base of the face brick creates a failure surface. Anchoring the face brick to the structural walls will reduce the risk of collapse of the brick facing.

- Non-structural components throughout the plant, including mechanical and electrical equipment and storage racks, are not anchored to walls or floor. Anchoring these freestanding components will protect the equipment and occupants.

- Piping and ductwork are installed without lateral bracing. Adding lateral bracing will help ensure continuous operation of the plant after a seismic event.

- Extensive water damage was observed in the UV Disinfection building. The recommended approach is to remove and replace the building with a structure designed to the current building code. If kept in its current condition, additional wall anchorage is necessary.

A summary of the structural deficiencies is presented in Table 2 for masonry buildings with flexible diaphragms. Table 3 presents structural deficiencies for light-framed buildings, and Table 4 provides the structural evaluation summary for tanks. Conceptual retrofit strategies and their associated costs for the recommended retrofits are summarized in Table 5.

3.0 BACKGROUND

The structures identified for seismic assessment were:

- Pump and Operations Building
- Headworks Structure and Electrical Building
- Circular Primary Clarifier
- Rectangular Primary Clarifiers 1 and 2
- Secondary Clarifiers No. 1 and 2
- Aeration Basins
- Primary Digester No. 1
- Digester Control Building
- Sludge Thickener and Control Building
- Chlorine Contact Basin
- Old Chlorine Building
- UV Disinfection Building and Storage Shed
- Plant Drain Pump Station

The locations of these structures in the Water Restoration Plant are shown on the Site Plan in Figure 1.

The structures listed above were divided into three groups based on the different approaches required for each building type. The first group consists of masonry buildings with flexible wood diaphragms, and includes the Pump and Operations Building, Digester Control Building, Headworks and Electrical Building, Plant Drain Pump Station, and the Old Chlorine Building. The second group consists of light wood framed buildings: UV Disinfection Building, Sludge Control Building, and the Storage Shed. The third group consists of buried or semi-buried concrete tanks.

Digester No. 2 has been abandoned. The Secondary Clarifier No. 3, Mixed Liquor Splitter Box, and RAS/WAS electrical buildings were constructed in 2002. The design requirements for these structures have mostly remained unchanged since their inception. Therefore, these structures were not included in this memorandum.

LEGEND

1. Operations Building
2. Headworks
3. Rectangular Primary Clarifiers
4. Circular Primary Clarifiers
5. Aeration Basins
6. Mixed Liquor Splitter Box
7. Secondary Clarifiers Nos. 1 and 2
8. Secondary Clarifier No. 3
9. RAS/WAS Pump Station
10. Primary Digester No. 1
11. Digester Control Building
12. Digester No. 2
13. Sludge Thickener
14. Sludge Control Building
15. Chlorine Contact Basin
16. Chlorine Building
17. UV Disinfection
18. Plant Drain Pump Station
19. Storage Shed

gp113f2-8613.ai

Figure 1
SITE PLAN
WATER RESTORATION PLANT FACILITY PLAN
SEISMIC CONDITION ASSESSMENT
GRANTS PASS, OREGON

The record drawings that were made available to Carollo for this evaluation were:

- 1962 CH2M drawings for the Sewage Treatment Plant Additions.
- 1974 Brown and Caldwell drawings for the Original Water Restoration Plant.
- 1994 Brown and Caldwell drawings for the Headworks, Primary and Disinfection.
- 2005 Parametrix drawings for Secondary Treatment Upgrade Phase 1.
- 2007 Parametrix drawings for Influent Pumping and Screening Upgrades.

Most of the original Sewage Treatment Plant structures, built prior to 1962, were demolished or abandoned and were not evaluated.

For the Geological Site Hazard evaluation, the following geotechnical reports were reviewed:

- 1994 AGI Technologies report for Water Restoration Plant Upgrade.
- 2001 GALLI Group report for Water Restoration Plant Upgrade.

4.0 SEISMIC ASSESSMENT APPROACH

Based on the damage observed in past earthquakes, in addition to larger seismic loads, the requirements of building codes have enhanced detailing requirements for seismic load resisting systems. As a result, buildings that were designed using previous building codes may inherently not meet the detailing specifications of the 2010 Oregon Structural Specialty Code (OSSC) currently in effect. In order to evaluate seismic performance of existing structures, standards such as ASCE 31 Seismic Evaluation of Existing Buildings have been developed.

4.1 Assessment of Building-Type Structures

Carollo's approach to seismic evaluation of buildings includes a visual condition assessment, as well as using screening checklists for seismic reliability provided as part of the three-tiered process standardized in ASCE 31. The ASCE 31 standard is commonly used as a way to evaluate anticipated seismic performance of existing buildings.

The Tier 1 phase is the initial screening step to efficiently identify potential deficiencies and determine if there is a need for additional investigation. The evaluation uses Basic Checklists provided in the standard for all building structures. Separate checklists are provided in ASCE 31 for various building types, as well as lateral load resisting systems. For buildings in areas of high seismicity, such as Grants Pass, a Supplemental Structural Checklist is required by ASCE 31. Items that are identified as noncompliant in Basic and Supplemental Structural checklists require further investigation through a Tier 2 analysis to better understand the anticipated damage. Tier 2 procedures include a more rigorous evaluation of specific elements of the structure. The ASCE 31 findings are presented in Appendix A.

4.1.1 Masonry Buildings with Wood Roof Diaphragms

The above ground portion of the Pump and Operations Building, Digester Control Building, Headworks Electrical Building, Plant Drain Pump Station, and the old Chlorine Building are masonry structures with flexible roof diaphragms (RM1). The ASCE 31 Tier 1 screening checklists for masonry buildings help identify deficiencies by evaluating the configuration and geometry, condition of the construction materials, connections, and diaphragms. More specifically, the connections at the top of masonry walls are susceptible to damage due to excessive movements in the diaphragm. Weak or improperly installed straps or anchors will lead to significant damage in the masonry walls in a seismic event.

4.1.2 Light Wood Frame Buildings

The buildings in this category are constructed with a light wood frame structure with plywood shear walls. This category includes the UV disinfection building, the Sludge Control Building, and the Storage Shed.

These building serve as enclosures protecting the occupants and contents from weather and are not considered critical to the operation of the plant. Record drawings of these buildings were not available to Carollo, therefore, a full ASCE 31 Tier 1 screening was not performed. The evaluation was based primarily on field observations and experience with similar buildings. The deficiencies identified as part of the field screening process were used to provide recommendations for retrofitting the structure.

4.2 Buried/Semi-buried Concrete Structures

Design of water containing structures under the OSSC is performed based on the requirements of American Concrete Institute Standard 350 (ACI 350). The evaluation and retrofit of the existing water containing structures was also based on the ACI 350. Carollo's approach to evaluation of concrete tanks includes analyzing the design of the tanks for the hydrodynamic forces prescribed by ACI 350-06. Generally speaking, the underground portions of buried or semi-buried concrete tanks perform well during an earthquake. Results of the seismic assessment of these structures are presented in section 5.3.

Additionally, recent advances concerning behavior of anchors in concrete have led to more stringent requirements for designing anchorage of equipment to concrete. As a result, it can be expected that the existing anchorage of the clarifier mechanisms will most likely sustain significant damage during an earthquake, and may leave the mechanism inoperable after an earthquake. Reducing the risk of damage with the goal of continuous operation will therefore require a retrofit of anchorage and the concrete center block in the clarification tanks.

4.3 Performance Objectives

The basic performance objectives for building code compliance assumes the structure will be capable of resisting a minor level of ground motion without significant damage to the structural elements and be capable of resisting the strongest forecast intensity earthquake without

collapsing. However, compliance with detailed requirements of the current building code may require difficult and expensive retrofit for existing buildings.

In addition to meeting these basic requirements of the building code, there are three specific performance objectives defined in ASCE 31 that were considered as part of this project. Performance objectives are Collapse Prevention/ Risk Reduction, Life Safety, and availability for Immediate Occupancy after a catastrophic event. These performance objectives are summarized in Table 1. In the selection of a specific performance objective for each structure, the following factors were considered:

1. Criticality of the structure: Will the plant operate without this structure being functional?
2. Occupancy of the structure: Does the structure house people?
3. Health hazard resulting from failure: Would damage to structure release hazardous materials or pathogens that could endanger staff or public?
4. Desired condition after a seismic event: What is the acceptable level of damage?
5. Economic loss: What are the costs of replacing damaged structures?

During the workshop held with the WRP staff and the City's public work director the Immediate Occupancy performance objective was adopted for the structural assets of the WRP. This is the typical assumption for critical structures related to wastewater treatment.

Table 1 Performance Levels for Seismic Evaluation
City of Grants Pass – Seismic Condition Assessment

Performance Level	Description
Collapse Prevention/ Risk Reduction	Significant damage to both structural and non-structural components during a design earthquake is expected. Extensive retrofits are required and building may not be salvageable after a design earthquake. Limited funds dictate addressing only deficiencies of significant importance. Non-structural elements will have lost restraint or collapsed
Life Safety	Significant damage to both structural and non-structural components during a design earthquake is expected. Some margin of resistance against collapse is expected. Non-structural elements are expected to be secure but may be extensively damaged.
Immediate Occupancy	Limited damage to both structural and non-structural components during the design earthquake is expected. The basic vertical and lateral force-resisting systems retain nearly all pre-earthquake strength and stiffness. The level of risk for life-threatening injury as a result of damage is very low. Some minor repairs will be necessary but the building will be fully habitable after the design earthquake.

4.4 Geotechnical Review

Geotechnical information from previous site investigation reports was reviewed as part of this project in order to identify any hazards (e.g., liquefiable sand layers that could affect the performance of the structure). The results of the geologic hazard assessment can be found in the General Site Geological Hazard checklist in Appendix A. After review of the available information, no significant concerns regarding geological hazards were identified.

4.5 Seismic Design Parameters

Site-specific characteristics were reviewed to calculate seismic acceleration values based on the 2010 OSSC. The lateral seismic demand on the structures for the seismic evaluation was calculated based on the requirements of ASCE 31. Design acceleration values were determined assuming Soil Site Class D (stiff soils):

- Short-Period Design Acceleration (T = 0.2 sec) S_{DS} = 0.61;
- Long-Period Design Acceleration (T = 1.0 sec) S_{D1} = 0.42.

5.0 SEISMIC ASSESSMENT RESULTS

The seismic design accelerations determined by OSSC place the WRP in an area designated as high seismicity; therefore, both Basic and Supplemental Structural checklists from ASCE 31 were used in the evaluations. To meet the continuous operation objective, attention has been given to non-structural contents of the buildings including piping, ductwork, mechanical and electrical equipment. The ASCE 31 Non-structural Components checklists were used for this assessment.

The criteria in the Basic Checklist are more rigorous than the Supplemental. For example, the findings for cladding in the Basic Nonstructural Checklist addresses glass becoming dislodged and falling. The Supplemental Nonstructural Checklist addresses glass providing a sufficient weather barrier following an earthquake. Table 2 summarizes the noncompliant attributes found on the Basic and Supplemental Structural Checklists required for the Tier 1 evaluation. Checklist details are presented in Appendix A.

The Findings and Recommendations section refers to numbered details, e.g., Out-of-Plane Wall Anchorage Deficiency – Detail 1. Conceptual illustrations of these details, to the extent possible, are presented in Appendix B.

5.1 Masonry Buildings with Flexible Diaphragms

The findings for this group of buildings are summarized in Table 2. Detailed description of the deficiencies and recommendations are included in this section.

Table 2	**Summary of Findings for Masonry Buildings with Flexible Diaphragms** ***City of Grants Pass – Seismic Condition Assessment***		
	ASCE 31 Tier 1 Non-Complying Attributes		
Structure Name and Deficiencies Found	**Basic Structural**	**Supplemental Structural**	**Non-Structural Components**
Operations Building			
• Out-of-plane wall anchorage deficient for penthouse floor joists.	X		
• Out-of-plane wall anchorage to penthouse roof deck insufficient.	X		
• No continuous cross-ties between roof diaphragm chords in the penthouse roof.		X	
• Irregular in plan. Roof diaphragm collector elements deficient.		X	
• Masonry walls of the workshop and screen room are cracked due to settlement.(1)			
• Anchorage and bracing required for mechanical and electrical equipment.			X
• Lateral bracing required for piping and ductwork, and light fixtures.			X
• Brick Veneer requires anchorage.			X
• Glass windows need to be replaced.			X
Digester Control Building			
• Out-of-plane wall anchorage to roof deck insufficient.	X		
• Anchorage and bracing required for mechanical and electrical equipment.			X
• Brick Veneer requires anchorage.			X
• Glass windows need to be replaced.			X
Headworks Electrical Building			
• Out of plane wall anchorage insufficient.	X		
• No continuous cross-ties between roof diaphragm chords.		X	
• Anchorage and bracing required for mechanical and electrical equipment.			X
• Lateral bracing required for piping and ductwork and light fixtures.			X

Table 2	**Summary of Findings for Masonry Buildings with Flexible Diaphragms** ***City of Grants Pass – Seismic Condition Assessment***		
	ASCE 31 Tier 1 Non-Complying Attributes		
Structure Name and Deficiencies Found	**Basic Structural**	**Supplemental Structural**	**Non-Structural Components**
Plant Drain Pump Station			
• Anchorage and bracing required for electrical equipment.			X
Old Chlorine Building			
• South Wall deficient for out-of-plane Bending.	X		
• Anchorage and bracing required for Hazardous Materials and Storage Racks.			X
Notes: (1) Structural observation not included in ASCE 31 Tier 1 checklists.			

5.1.1 Operations Building

The Pump and Operations Building is a multi-story building with a gabled roof and brick veneer siding. The buried portion of the structure is designed with reinforced concrete bearing and shear walls. The above ground portion of the structure is a combination of concrete masonry block, concrete shear walls, and reinforced brick walls. The roof consists of two separate wood diaphragms constructed at two different elevations. The east and west roof diaphragms have a maximum of 11-foot difference in elevation. The roof deck system includes straight sheathing (interlocking wood planks) and plywood nailed to the sheathing. All bearing walls were designed with reinforcement and dowels into the foundation. The building was designed using the 1971 UBC and constructed in 1972.

5.1.1.1 Structural Findings

Out-of-plane Wall Anchorage Deficiency: The deck to wall connection for the floor deck of the penthouse is at risk of failure during an earthquake. Cross-grain bending in the ledger block at the floor to wall connection is a common deficiency of buildings built in the 1970s. Addressing this connection is necessary to provide lateral support for the penthouse floor deck during an earthquake.

Continuous Cross-Tie Deficiency: The blocking between the rafters in the penthouse roof deck does not have positive connections to transfer out-of-plane wall anchorage forces through the diaphragm; without this, the walls are at risk of separating from the roof.

Out-of-Plane Wall Anchorage Deficiency: The connection of roof joists to the walls of the penthouse is deficient for out-of-plane forces. The joist hangers provided during original construction are only capable of resisting vertical loads.

Collector Element at Re-entrant Corner Deficiency: The roof diaphragm has two re-entrant corners at the east side of the workshop, and west of the control room. Collector elements are needed at these corners to provide a complete load path and avoid extensive damage.

Deflection Compatibility Deficiency: In the hallway east of the screen room (column line 7), where the lower roof diaphragm connects to the east wall of the screen room, the lower roof deck rests on a wood ledger that is connected to the face brick on the east side of the masonry wall. The drawings show an air gap between the two walls. Details of the connection of the ledger block to the brick are not included in the record drawings. It can be expected that the lower roof decking is nailed to the ledger block. Regardless of the connection details, deflection of the lower roof in the east-west direction will cause the end of the deck to pound on the brick veneer, causing it to collapse. Any damage to the brick veneer at this location will threaten the safety of the occupants.

Masonry Wall Cracking: Diagonal cracking was observed in the south and east walls of the workshop, as well as south wall of the screen room. Concrete Masonry Units (CMU) used in the building are only grouted in cells with reinforcement. Therefore, the CMU blocks have low shear capacity. In areas with high seismic risk, the building codes require that masonry wall be fully grouted. Some of the cracks occurring in the masonry wall of the screening room and the workshop may have been avoided if the masonry walls where fully grouted.

5.1.1.2 Non-Structural Components

Insufficient Lateral Bracing for Pipes and Ductwork: Many unsupported runs of pipe and ductwork were observed throughout the building, including a 4-inch diameter natural gas pipe entering through the gallery and turning towards the boiler room. These pipes, conduits, and ducts need to be braced laterally in order to avoid damage or rupture during an earthquake.

Insufficient Anchorage of Equipment: Several storage racks observed in the Operations Building were not anchored to the wall or the floors.

Electrical equipment including the pump room MCCs, older cabinets in the MCC room, UPS batteries in the pump room, and transformers were identified that are not anchored to the walls or floors.

Mechanical equipment including, the old blowers, the boiler, fans (HV16), gas heaters in the workshop and the generator room, the generator silencer, the water heater in the penthouse, and other equipment were found in need of lateral bracing and anchorage in order to resist seismic loads.

Deficient Detailing for Brick Veneer: Brick veneer is installed on the exterior of most masonry walls of the building. In high seismicity zones, the OSSC requires veneer to be reinforced using wire reinforcement cast with the masonry walls supporting the veneer. Reinforcing the veneer and attaching it to the structural walls prevents it from falling out or collapse during an earthquake. The 1972 drawings do not contain any information on anchorage of the brick veneer to the masonry walls.

Additionally, the through-wall flashing designed for the face brick creates a smooth failure surface at the base of the brick veneer. This flashing detail is used universally for all face brick. In order to avoid damage to the brick at the flashing, it should be anchored to the walls.

Light Fixtures Require Bracing: Pendant supported light fixtures were observed throughout the building. During a seismic event, lights with pendant supports swing, and may shatter the light bulbs or the covers. It is usually recommended that the pendant lights are braced or covered for the safety of the building occupants.

Tempered Glass Required: There are several long windows near occupied areas such as the Control Room and the laboratory. Since the glass is not tempered or laminated there is risk of injury to the occupants.

5.1.1.3 Geotechnical Review Results

The cracks observed on the East wall and South wall of the Workshop above the roll-up door, as well as similar cracking seen in the South and East walls of the Screen room is evidence of settlement of soil that has occurred under the southeast corner of the building. . Reviewing the record drawings showed that the south side of the operations building was built on a 10-foot compacted engineering fill up to elevation 915.38.

Compacted engineered fill is expected to settle 1 to 2 percent (1 to 2.5 inches per 10 feet) over the long term. The portion of the structures resting on the fill will lose support and cause cracking in the walls.

The settlement of an engineered fill is expected to slow down and eventually stop. Therefore, the observed cracks do not pose an immediate danger to the structure at this time.

5.1.1.4 Recommendations

Provide straps for out-of-plane wall anchorage perpendicular to floor rafters (Detail 1) to prevent cross-grain bending in the ledger blocks.

Use strap connectors to tie together blocking on opposite sides of roof joists. This will create a continuous load path between the diaphragm chords (Detail 2). Addition of these straps can be done from the underside of the joists.

Provide out-of plane wall anchorage parallel to roof rafters (Detail 3) to prevent cross-grain bending in the ledger blocks.

Anchor electrical and mechanical equipment, and storage racks throughout the building. This retrofit is a high priority since it will help maintain the continuous operation of the equipment, as well as life safety of the occupants. Lateral bracing is also required for the piping and ducts, gas heaters, and light fixtures.

Investigate the brick veneer installation to confirm whether anchors or reinforcement were provided. If anchorage was not installed, use wall façade anchors such as Simpson Strong-Tie

Heli-Tie™ to anchor the veneer to prevent it from collapsing. Brace the panels over areas of 3.5 square feet maximum. Due to the extent of the use of brick elements in the building, one approach is to anchor only brick walls adjacent to walking or occupied areas. The estimated costs assume that 30 percent of the brick veneer area will be anchored.

Based on ASCE 31 recommendations, all exterior glass and glazing over 16 square feet in area located up to a height of 10 feet above an exterior walking surface shall have safety glazing. Replace such glazing with annealed or laminated glass for Life Safety. For Immediate Occupancy and continuous operation of buildings, ASCE 31 recommends that all exterior glass and glazing is reinforced, tempered, laminated, or heat-strengthened safety glass in order to enclose the building.

5.1.2 Digester Control Building

Digester Control building was built together with Primary Digester No. 1 in 1972. The roof diaphragm consists of straight sheathing with a plywood deck. The roof is connected to two reinforced brick feature walls on the south side, and reinforced concrete masonry block walls on east and west. On the north side, the roof is connected to the walls of the digester.

5.1.2.1 Structural Findings

Out-of-Plane Wall Anchorage Deficiency: The connection of the ledger to the roof joists around the roof does not have sufficient anchors to prevent cross-grain bending damage, a common type of earthquake damage.The joist hangers provided during original construction are only capable of resisting vertical loads.

5.1.2.2 Non-Structural Components

Insufficient Lateral Bracing for Pipes: Piping inside the Digester Control Building has minimal bracing.

Insufficient Equipment Anchorage: Pump skid located in the small room outside of the Digester Control Building is not anchored to the floor. The surge tank inside the building appears to be sitting on the floor without anchorage to the concrete.

Deficient Detailing for Brick Veneer: After review of the record drawings, there is no indication that he brick used in the feature walls is anchored to the concrete core. However, the brick veneer on the exterior of the digester walls is anchored to the concrete using dovetail anchors. Unanchored brick walls are vulnerable to lateral seismic loads as mentioned in the previous section and need to be reinforced or braced. As mentioned previously, presence of flashing at the bottom of all face brick and reinforced brick walls provides a smooth failure surface for the brick. Anchoring the face brick to the supporting structural wall will address this concern.

Tempered Glass Required: The East, West, and South sides of the building have large glass windows without any labeling indicating that the glass is tempered.

5.1.2.3 Recommendations

Provide new straps for out of plane wall anchorage (Detail 3) to prevent cross-grain bending in the ledge block.

Provide additional lateral bracing for piping inside the digester control building.

Anchor surge tank inside the building to the floor using steel clips that can be welded or bolted to the sides.

Anchor pump skid located in the room outside of the Digester Control building to the floor.

Investigate the feature brick walls on the East, West, and South sides to establish whether the brick units are anchored to the concrete core. To address the concerns with the flashing at the base of the walls, anchor brick veneer to the walls using Heli-Tie or similar anchors.

Replace glass windows with tempered or laminated glass as indicated in section 5.1.1.4.

5.1.3 Headworks Electrical Building

The Headworks Electrical Building was constructed in 1994 as part of the new Headworks structure. It has masonry walls and a plywood deck nailed to roof rafters. The roof deck is connected to the walls of the building through a ledger block bolted to the walls.

5.1.3.1 Structural Findings

Out-of-Plane Wall Anchorage Deficiency: The connection of the ledger to the roof joists around the roof does not have sufficient anchors to prevent cross-grain bending damage, a common type of earthquake damage.The joist hangers provided during original construction are only capable of resisting vertical loads. Providing new wall to roof joist connections will tie the roof to the wall. This will reduce the risk of loss of support for wall during an earthquake.

Continuous Cross-Tie Deficiency: Walls parallel to joists do not have sufficient cross-ties to the opposite side of the building. There is no continuous load path perpendicular to the wall to keep the walls from separating from the building.

5.1.3.2 Non-Structural Components

There is significant water leakage through the doors and the roof opening of the Headworks Electrical building. The water has caused significant staining on the masonry blocks and around the electrical cabinets. The building requires further inspection to determine the exact location of the leaks as well as weatherproofing to prevent damage to the equipment inside.

Pendant supported light fixtures are installed in the basement of the building. These fixtures are not braced against swinging.

Miscellaneous piping and ductwork installed in the basement lacks lateral bracing.

5.1.3.3 Recommendations

Add out-of-plane anchorage on both walls (Details 1 and 3) to address the cross-grain deficiency at the roof to wall connection.

Provide strap connectors tying together blocking on opposite sides of roof joists, to create a continuous load path between the diaphragm chords (Detail 2).

Investigate cause of moisture. Replace flashing as required to waterproof the roof deck and apply waterproofing materials on the exterior of the building as required.

Provide lateral bracing for ductwork, electrical equipment, and light fixtures.

5.1.4 Plant Drain Pump Station

Plant Drain Pump Station was constructed as part of the 1962 additions to the Sewage Treatment Plant. The structure has partially grouted masonry walls with straight sheathing for the roof deck.

5.1.4.1 Structural Findings

No major structural deficiencies were found.

5.1.4.2 Non-Structural Components

Electrical cabinets and UPS battery systems installed inside the building are not anchored. This equipment is critical to the operation of the WRP and should be anchored to the walls or floor to protect against lateral seismic loads.

Signs of moisture was observed behind one of the MCC cabinets. This leakage may be associated with deteriorated roofing or flashing. Waterproofing the walls may help keep the moisture from penetrating the walls. Continued penetration of moisture may cause damage, corrosion, or short-circuiting in the electrical wiring.

5.1.4.3 Recommendations

Investigate source of moisture inside the building.

Anchor electrical cabinets to the walls or the foundation.

5.1.5 Old Chlorine Building

The old chlorine building is a small square masonry structure that was built as part of the 1962 additions to the Sewage Treatment Plant. The masonry blocks are reinforced and partially grouted.

5.1.5.1 Structural Findings

Wall Out-of-Plane Bending Deficiency: The south wall of the Old Chlorine Building has a large window opening and a double door. Because of these large openings, the south wall does not have sufficient capacity for out-of-plane wall bending.

5.1.5.2 Non-Structural Components

A cabinet containing flammable materials is not anchored to the floor. In addition, there are no containment areas for the oil barrels and other hazardous materials stored in the building.

5.1.5.3 Recommendations

Remove the existing door on the south wall of the building and fill with reinforced masonry blocks to provide additional out of plane bending capacity for the wall (Detail 4).

Anchor cabinets and storage racks to the walls or the foundation. In order to avoid an oils spill, brace the oil barrels against the walls and provide containment totes.

5.2 Light Wood Frame Buildings

A summary of findings for the Light Wood Frame Buildings is presented in Table 3, followed by detailed descriptions of the deficiencies and recommendations for retrofit.

Table 3 Summary of Findings for Light Frame Buildings
City of Grants Pass – Seismic Condition Assessment

	ASCE 31 Tier 1 - Non-complying attributes		
Structure Name and Deficiencies Found	**Basic Structural**	**Supplemental Structural**	**Non-Structural Components**
UV Disinfection Building			
• Deterioration of plywood Shear Wall.	X		
• Shear Wall hold down details deficient	X		
• Deterioration of plywood roof diaphragm.	X		
Sludge Control Building			
• Out-of-plane wall anchorage to roof deck insufficient.	X		
• Shear Wall connection details unknown.	X		
• Shear Wall hold down details deficient.	X		
Storage Shed			
• Shear Wall connection details unknown.	X		
• Shear Wall hold down details deficient.	X		
• Storage Racks are not anchored.			X

5.2.1 UV Disinfection Building

Extensive water damage was observed on the shear walls, the roof deck, and roof trusses. The building was not designed for seismic loading. The wood sills are not anchored to the floor and the building is not braced against lateral loading. The details of nailing for the shear walls are not known.

A 1.5 ton monorail is supported by the roof trusses.

5.2.2 Sludge Control Building

The sludge control building has evolved into a building from a canopy. The addition of the walls and door was done without seismic considerations.

The wood sills at the bottom of the walls are not anchored to the floor The details of the nailing for the shear walls are not known.

5.2.3 Storage Shed

The storage shed contains landscaping equipment, and spare parts that are stored on a storage rack. The storage racks are not anchored to the floor. The wood sills at the base of the walls are not anchored to the concrete slab.

5.2.4 Recommendations

The UV enclosure is not designed to comply with current building codes. Additionally, the structure has suffered extensive water damage. Demolishing and replacing the enclosure with a new structure is the recommended alternative.

For all the three buildings, the wall bottom sills should be anchored to the concrete slab to complete the load path from the building to the foundation.

Anchor storage racks and equipment to the walls or floors for improved reliability during an earthquake.

5.3 Buried/Semi-Buried Concrete Structures

All the concrete tanks in this group, except the chlorine contact basin, were in service during the site inspection, making observation of the submerged parts of these structures impossible. The findings of the visual assessment of these structures are presented in this section. Due to the age of the concrete structures, a detailed inspection of the interior walls and foundations, together with testing to evaluate deterioration of the concrete in the tanks, is recommended during scheduled maintenance.

Table 4 summarizes the findings of the seismic condition assessment followed by a detailed description. Many assets were found in good condition but will still need rehabilitation or replacement for long-term service. This would include coating the interior of the tanks. For

planning purposes, it is recommended that these tanks be evaluated for replacement or rehabilitation for the long-term service (fifteen year or longer timeframe).

Photographs documenting the condition assessment findings can be found in Appendix D.

Table 4 Summary of Findings for Buried/Semi-Buried Concrete Structures
City of Grants Pass – Seismic Condition Assessment

Structure Name and Deficiencies Found	Governing Standard
Below Ground Portion of Operations Building	
• No seismic deficiencies were found.	OSSC 2010
Headworks and Rectangular Primary Clarifiers	
• Piping requires bracing.	ASCE 31
• Cracks in the concrete deck at the openings.	ASCE 31
Circular Primary Clarifier	
• Walkway and mechanism anchorage deficient.	ASCE 31
• Corrosion observed.	ASCE 31
Aeration Basins	
• Pipes require additional supports and bracing.	ASCE 31
• Knockout walls for future expansion are overstressed.	OSSC 2010, ACI 350-06
Secondary Clarifiers No. 1 and 2	
• Walkway and mechanism anchorage deficient.	ASCE 31
• Hoop reinforcing deficient. Walls may crack during a large seismic event.	OSSC 2010, ACI 350-06
Sludge Thickener Tank	
• Walkway and mechanism anchorage deficient.	ASCE 31
• Heavy corrosion of walkway piping and mechanism.	ASCE 31
Primary Digester No. 1	
• Vertical and hoop reinforcing deficient, walls may crack during a large seismic event.	OSSC 2010, ACI 350-06
• Flashing provided at the base of walls may cause the veneer to collapse.	ASCE 31
Chlorine Contact Basin	
• Vertical and hoop reinforcing deficient, walls may crack during a large seismic event.	OSSC 2010, ACI 350-06
• Masonry divider walls reinforcement deficient, may collapse during a moderate to large seismic event	OSSC 2010, ACI 350-06

5.3.1 Below-ground Portion of Operations Building

No major structural deficiencies were found.

5.3.2 Headworks and Rectangular Primary Clarifiers

The Headworks and Rectangular Primary Clarifiers were designed and constructed in 1994 using the 1991 Uniform Building Code (UBC). The masonry walls are reinforced and detailed similar to the current Building Code. Therefore, no major retrofits are required for this structure.

Diagonal cracks were observed on the deck of the Headworks area at the corners of some rectangular openings. The cost of repair and retrofit of these cracks is included in the Cost Estimates in Table 4.

5.3.3 Circular Primary and Secondary Clarifiers

The Circular Primary Clarifier was constructed in 1964 as part of the original Sewage Treatment Plant. Secondary Clarifiers No. 1 and 2 were constructed as part of the 1972 expansions of the WRP, while Secondary Clarifier Tank No. 3 was added in 2002. During Carollo's site visit in December 2012 the condition of the submerged portion of the tanks was not observed as the tanks were all in service. The older concrete structures are approaching or have exceeded their expected useful life. Therefore, it can be expected that the quality of the concrete in the tanks has diminished. The extent of deterioration of the concrete shall be inspected and tested for long-term planning during scheduled maintenance.

Seismic analysis of the Circular Primary Clarifier tank did not identify any structural deficiencies. However, analysis of the Secondary Clarifiers No. 1 and 2 found that hoop reinforcing is overstressed. During a significant seismic event, the horizontal wall reinforcing steel may become overstressed and cracks will occur in the tank wall, causing leaks that will need to be repaired. The overstressed region is located near the mid-height of the wall. In order to keep the Secondary Clarifiers in service, post-tensioning the walls from the exterior of the tanks is recommended. This would require excavating around the tanks to provide access during construction.

The walkway bridges bearing are at risk of falling off their seats at the tank walls. Increasing the size of the bearing seats will prevent walkway bridge collapse.

Recent changes in the Building Code approach to designing equipment anchorage result in increased number of anchor bolts, edge distance, and embedment. Planning for retrofit or replacement of the clarification mechanism should take into account that the new anchors will require modifications to the concrete foundation. The construction cost estimates in Table 5 include this work, along with the replacement of the mechanism center column. However, a full replacement of the clarifier mechanism will most likely be recommended if the tanks are modified.

5.3.4 Aeration Basins

Aeration Basins were constructed in 1972 as part of the original WRP project. The east wall of the aeration basins have full-height knock out walls for future expansion. These walls have little

capacity to resist seismic sloshing loads. This is a significant seismic deficiency that must be addressed to meet the City's objective of continuous operation.

If not removed to expand the basins, the knockout walls should be strengthened or replaced with cast-in-place concrete walls with reinforcing steel doweled into the buttress wall located at 11-foot spacing on the east end of the aeration basins. This will require the each of the aeration basins to be out of service for at least two months.

The interior masonry baffle walls are not designed for seismic sloshing loads and are likely to collapse during a significant earthquake. These walls should be strengthened with additional reinforcing at the same time that the end walls are upgraded.

A review of the record drawings for the Aeration basin showed that the submerged air piping has long unsupported lengths that are not braced for lateral loading in a seismic event. If these pipes are left in their current condition, they will most likely sustain considerable damage during an earthquake.

5.3.5 Sludge Thickener

Originally built in 1972 as part of the original WRP design, the tank seems to be in a good shape. Only a few vertical shrinkage cracks were observed on the walls above the operating level. No structural deficiency was found through seismic analysis of the tank.

The walkway bridge bearing is at risk of falling of the seat at the tank wall. Increasing the size of the bearing seat will prevent walkway bridge collapse.

Planning for retrofit or replacement of the thickener mechanism should take into account that the new anchors will require modifications to the concrete foundation. The construction cost estimates in Table 5 include this work, along with the replacement of the mechanism center column.

The coating on the walkway and piping for the sludge thickener has failed in numerous places. Regular maintenance and coating of the pipe, walkway and guardrails will increase their expected useful life.

5.3.6 Primary Digester No. 1

The Primary Digester No. 1 was constructed in 1974 as part of the original WRP expansions. The digester tank and the Digester Control Building are part of the same structure. The digester is designed with a floating steel cover.

Seismic analysis of the structure shows that hoop reinforcing and vertical reinforcing is overstressed. During a significant seismic event, the wall reinforcing steel may become overstressed and cracks will open in the tank wall causing leaks that will need to be repaired. The overstressed region is near the middle and at the base of the wall. The tank will need to be emptied to seal the leaks.

Adding additional reinforcing steel would require excavating around the tanks. Because it is likely that the tanks will be able to remain in service following a seismic event, this deficiency does not significantly threaten continuous operation.

The concrete tank is covered with brick veneer. Contrary to the other structures in the WRP, record drawings indicate the brick veneer is anchored to the concrete tank walls. The brick veneer appears to be in good condition.

5.3.7 Chlorine Contact Basin

The Chlorine Contact Basin was constructed in 1964 as a trickling filter for the original Sewage Treatment Plant. During the 1972 expansion, the rotating mechanism and center pier were removed. To convert the tank into chlorine contact tanks, the wall was raised, a concrete wall built to divide the tank into two, and serpentine masonry walls constructed. More recently in 1995, two thirds of the masonry walls were removed. Currently the tank is used occasionally for storage. During Carollo's site visit in December 2012, the condition of the tank appeared fair.

Seismic analysis of the structure shows that hoop reinforcing and vertical reinforcing is overstressed. If the tank is full during a significant seismic event, the wall reinforcing steel may become overstressed and cracks will open in the tank wall, causing leaks that will need to be repaired. The overstressed region is over the height of the entire wall and is more significant at the ends of the divider wall. The tank will need to be emptied to seal the leaks.

More significantly, the divider wall is likely to be damaged and the serpentine masonry walls are likely to collapse in a moderate or significant seismic event. It is unclear from the record drawings how the masonry wall reinforcing was anchored into the tank's original 6-inch thick bottom slab. It is possible these walls have little or no lateral load capacity. Since these walls no longer provide any function, demolition will eliminate this risk.

5.4 Concrete Condition Evaluation

Deterioration of the concrete and erosion of the cover over the reinforcement is common for concrete tanks in wastewater plants. If the reduction of the concrete cover is not addressed, it will eventually lead to corrosion of the reinforcement and deterioration of concrete.

To address this concern, depth of deterioration is investigated during a scheduled maintenance. When significant deterioration is found and the asset is planned for long-term service, coating the concrete with elastomeric polyurethane is recommended to increase the expected useable life of the structure.

6.0 CONSTRUCTION COST ESTIMATES

The estimated construction costs presented in this TM are based on preliminary structural retrofit recommendations as developed for this TM.

The estimated construction costs for each structure were developed based on a variety of sources. Once the initial costs were prepared, a 30 percent contingency was applied to reflect uncertainties at this pre-design stage and assumptions used in the estimating methods.

A summary of retrofit projects recommended and the estimated costs associated with them are presented in Table 5 on the following page.

7.0 PRIORITIZATION

The need to address each structure's identified deficiencies was prioritized as a low, moderate or high priority. The prioritization is presented in Table 6.

Low priority projects are judged to not pose a significant risk to personnel and to plant operations. Anticipated damage can be readily repaired.

Moderate priority projects do not pose a significant threat to personnel. These deficiencies may impact operations, but are judged to be repairable in a reasonable period of time. The deficiencies can be addressed as part of maintenance and upgrades to the structure.

High priority projects pose a significant risk to the safety of plant personnel or to the plant's ability to treat wastewater. The deficiencies should be addressed as soon as possible.

Table 5	**Cost Estimates** ***City of Grants Pass – Seismic Condition Assessment***		
Structure	**Required Improvements**	**Estimated Construction Cost**	**Estimated Total Project Cost**
Operations Building	Add straps, wall anchors, equipment anchorage, pipe bracing, roof collector element, anchor face brick, replace glass	$249,000	$311,000
Digester Control Building	Add wall anchors, replace glass, add equipment anchorage, pipe bracing	$43,000	$54,000
Headworks Electrical Building	Replace roofing, add straps, add wall anchors, equipment anchorage, brace duct and pipes.	$17,000	$21,000
Plant Drain Pump Station	Add equipment anchorage	$3,000	$4,000
Old Chlorine Building	Add anchorage, remove and infill access door	$6,000	$8,000
Sludge Control Building	Replace damaged plywood, complete nailing, add wall anchorage.	$7,000	$9,000
UV Disinfection Enclosure and Storage Shed.	Add wall anchors. Add bracing where required. Replace the UV building	$68,000	$85,000
Circular Primary Clarifier	Strengthen mechanism anchorage, replace center column, improve bridge bearing	$268,000	$335,000
Aeration Basins	Replace knockout walls and baffle walls	$225,000	$281,000
Secondary Clarifiers No. 1 & 2	Strengthen mechanism anchorage, post tension the clarifier walls, replace center column, improve bridge bearing	$791,000	$989,000
Sludge Thickener	Strengthen mechanism anchorage, replace center column, improve bridge bearing	$142,000	$178,000
Chlorine Contact Basin	Demolish concrete divider and masonry serpentine walls	$78,000	$98,000
	Total	**$1,897,000**	**$2,373,000**

Table 6 Prioritization ***City of Grants Pass – Seismic Condition Assessment***		
Structure	**Priority**	**Comment**
Operations Building	High	Falling debris from brick façade poses a risk to persons in vicinity of building during an earthquake. Roof collector element may leave the building unsafe to enter after an earthquake without significant repairs. Failure of the roof to wall connection may leave the walls unstable.
Digester Control Building	High	Failure of the roof to wall connection may leave the walls unstable. Broken glass poses a risk to persons in vicinity of building during an earthquake.
Headworks Electrical Building	Moderate	Failure of the roof to wall connection may leave the walls unstable. Water damaged roof may have compromised the building's capacity to resist earthquake loads.
Plant Drain Pump Station	Moderate	Non-structural deficiencies should be addressed as high-priority.
Old Chlorine Building	Low	South wall may be damaged. Non-structural deficiencies should be addressed as high-priority.
Sludge Control Building	Low	The building is not designed for seismic loads. If damaged during an earthquake it can be demolished
UV Disinfection Enclosure and Storage Shed.	Moderate	The building is not designed for seismic loads. Collapse can damage UV equipment.
Circular Primary Clarifier	Moderate	Anticipated damage can be repaired without significant impact on operations. Clarifier mechanism may become inoperable.
Aeration Basins	High	Damage to the knock out walls could leave the treatment plant inoperable without significant repairs.
Secondary Clarifiers No. 1 & 2	Moderate	Anticipated damage can be repaired without significant impact on operations. Clarifier mechanisms may become inoperable.
Sludge Thickener	Moderate	Thickener mechanism may become inoperable.
Chlorine Contact Basin	Low	Tank is used infrequently.

Appendix A

ASCE 31-03 STRUCTURAL EVALUATION CHECKLISTS

3.7.16 General Basic Structural Checklist

		Compliance
	Building System- Configuration	
WEAK STORY	The strength of the lateral-force-resisting system in any story shall not be less than 80 percent of the strength in an adjacent story, above or below, for Life Safety and Immediate Occupancy. (Tier 2: Sec. 4.3.2.1)	C
SOFT STORY	The stiffness of the lateral-force-resisting system in any story shall not be less than 70 percent of the lateral-force-resisting system stiffness in an adjacent story above or below, or less than 80 percent of the average lateral-force-resisting system stiffness of the three stories above or below for Life Safety and Immediate Occupancy. (Tier 2: Sec. 4.3.2.2)	C
GEOMETRY	There shall be no changes in horizontal dimension of the lateral-force-resisting system of more than 30 percent in a story relative to adjacent stories for Life Safety and Immediate Occupancy, excluding one-story penthouses and mezzanines. (Tier 2: Sec. 4.3.2.3)	C
VERTICAL DISCONTINUITIES	All vertical elements in the lateral-force-resisting system shall be continuous to the foundation. (Tier 2: Sec. 4.3.2.4)	C
MASS	There shall be no change in effective mass more than 50 percent from one story to the next for Life Safety and Immediate Occupancy. Light roofs, penthouses, and mezzanines need not be considered. (Tier 2: Sec. 4.3.2.5)	C
TORSION	The estimated distance between the story center of mass and the story center of rigidity shall be less than 20 percent of the building width in either plan dimension for Life Safety and Immediate Occupancy. (Tier 2: Sec. 4.3.2.6)	C
	Building System- General	
LOAD PATH	The structure shall contain a minimum of one complete load path for Life Safety and Immediate Occupancy for seismic force effects from any horizontal direction that serves to transfer the inertial forces from the mass to the foundation. (Tier 2: Sec. 4.3.1.1)	C
ADJACENT BUILDINGS	The clear distance between the building being evaluated and any adjacent building shall be greater than 4 percent of the height of the shorter building for Life Safety and Immediate Occupancy. (Tier 2: Sec. 4.3.1.2)	NA
MEZZANINES	Interior mezzanine levels shall be braced independently from the main structure, or shall be anchored to the lateral-force-resisting elements of the main structure. (Tier 2: Sec. 4.3.1.3)	C
	Building System- Condition of Materials	
DETERIORATION OF WOOD	There shall be no signs of decay, shrinkage, splitting, fire damage, or sagging in any of the wood members, and none of the metal connection hardware shall be deteriorated, broken, or loose. (Tier 2: Sec. 4.3.3.1)	C

DETERIORATION OF STEEL	There shall be no visible rusting, corrosion, cracking, or other deterioration in any of the steel elements or connections in the vertical- or lateral-force-resisting systems. (Tier 2: Sec. 4.3.3.3)	C
DETERIORATION OF CONCRETE	There shall be no visible deterioration of concrete or reinforcing steel in any of the vertical- or lateral-force-resisting elements. (Tier 2: Sec. 4.3.3.4)	C
MASONRY UNITS	There shall be no visible deterioration of masonry units. (Tier 2: Sec. 4.3.3.7)	C
MASONRY JOINTS	The mortar shall not be easily scraped away from the joints by hand with a metal tool, and there shall be no areas of eroded mortar. (Tier 2: Sec. 4.3.3.8)	C
CONCRETE WALL CRACKS	All existing diagonal cracks in wall elements shall be less than 1/8 inch for Life Safety and 1/16 inch for Immediate Occupancy, shall not be concentrated in one location, and shall not form an X pattern. (Tier 2: Sec. 4.3.3.9)	C
REINFORCED MASONRY WALL CRACKS	All existing diagonal cracks in wall elements shall be less than 1/8 inch for Life Safety and 1/16 inch for Immediate Occupancy, shall not be concentrated in one location, and shall not form an X pattern. (Tier 2: Sec. 4.3.3.10)	C
	Connections- Anchorage for Normal Forces	
WALL ANCHORAGE	Exterior concrete or masonry walls that are dependent on the diaphragm for lateral support shall be anchored for out-of-plane forces at each diaphragm level with steel anchors, reinforcing dowels, or straps that are developed into the diaphragm. Connections shall have adequate strength to resist the connection force calculated in the Quick Check procedure of Section 3.5.3.7. (Tier 2: Sec. 4.6.1.1)	C
WOOD LEDGERS	The connection between the wall panels and the diaphragm shall not induce cross-grain bending or tension in the wood ledgers. (Tier 2: Sec. 4.6.1.2)	C
	Connections- Shear Transfer	
TRANSFER TO SHEAR WALLS	Diaphragms shall be connected for transfer of loads to the shear walls for Life Safety and the connections shall be able to develop the lesser of the shear strength of the walls or diaphragms for Immediate Occupancy. (Tier 2 Sec. 4.6.2.1)	C
TRANSFER TO STEEL FRAMES	Diaphragms shall be connected for transfer of loads to the steel frames for Life Safety, and the connections shall be able to develop the lesser of the strength of the frames or the diaphragms for Immediate Occupancy. (Tier 2: Sec. 4.6.2.2)	NA
TOPPING SLAB TO WALLS OR FRAMES	Reinforced concrete topping slabs that interconnect the precast concrete diaphragm elements shall be doweled for transfer of forces into the shear wall or frame elements for Life Safety, and the dowels shall be able to develop the lesser of the shear strength of the walls, frames, or slabs for Immediate Occupancy. (Tier 2: Sec. 4.6.2.3)	NA

	Connections- Vertical Components	
STEEL COLUMNS	The columns in lateral-force-resisting frames shall be anchored to the building foundation for Life Safety, and the anchorage shall be able to develop the lesser of the tensile capacity of the column, the tensile capacity of the lowest level column splice (if any), or the uplift capacity of the foundation, for Immediate Occupancy. (Tier 2: Sec. 4.6.3.1)	NA
CONCRETE COLUMNS	All concrete columns shall be doweled into the foundation for Life Safety, and the dowels shall be able to develop the tensile capacity of reinforcement in columns of lateral-force-resisting system for Immediate Occupancy. (Tier 2: Sec. 4.6.3.2)	NA
WOOD POSTS	There shall be a positive connection of wood posts to the foundation. (Tier 2: Sec. 4.6.3.3)	NA
WOOD SILLS	All wood sills shall be bolted to the foundation. (Tier 2: Sec. 4.6.3.4)	NA
FOUNDATION DOWELS	Wall reinforcement shall be doweled into the foundation for Life Safety, and the dowels shall be able to develop the lesser of the strength of the walls or the uplift capacity of the foundation for Immediate Occupancy. (Tier 2: Sec. 4.6.3.5)	C
SHEAR-WALL-BOUNDARY COLUMNS	The shear-wall-boundary columns shall be anchored to the building foundation for Life Safety, and the anchorage shall be able to develop the tensile capacity of the column for Immediate Occupancy. (Tier 2: Sec. 4.6.3.6)	NA
PRECAST WALL PANELS	Precast wall panels shall be connected to the foundation for Life Safety and the connections shall be able to develop the strength of the walls for Immediate Occupancy. (Tier 2: Sec. 4.6.3.7)	NA
WALL PANELS	Metal, fiberglass, or cementitious wall panels shall be positively attached to the foundation for Life Safety and Immediate Occupancy. (Tier 2: Sec. 4.6.3.8)	NA
	Diaphragms- Precast Concrete Diaphragms	
TOPPING SLAB	Precast concrete diaphragm elements shall be interconnected by a continuous reinforced concrete topping slab. (Tier 2: Sec. 4.5.5.1)	NA
	Lateral Force Resisting System- Concrete Shear Walls	
SHEAR STRESS CHECK	The shear stress in the concrete shear walls, calculated using the Quick Check procedure of Section 3.5.3.3, shall be less than the greater of 100 psi or 2 sqrt(f'c) for Life Safety and Immediate Occupancy. (Tier 2: Sec. 4.4.2.2.1)	C
REINFORCING STEEL	The ratio of reinforcing steel area to gross concrete area shall be not less than 0.0015 in the vertical direction and 0.0025 in the horizontal direction for Life Safety and Immediate Occupancy. The spacing of reinforcing steel shall be equal to or less than 18 inches for Life Safety and Immediate Occupancy. (Tier 2: Sec. 4.4.2.2.2)	C
COLUMN SPLICES	Steel columns encased in shear-wall-boundary elements shall have splices that develop the tensile strength of the column. This statement shall apply to the Immediate Occupancy Performance Level only. (Tier 2: Sec. 4.4.2.2.9)	NA

	Lateral Force Resisting System- Frames Not Part of the Lateral-Force-Resisting System	
COMPLETE FRAMES	Steel or concrete frames classified as secondary components shall form a complete vertical-load-carrying system. (Tier 2: Sec. 4.4.1.6.1)	C
	Lateral Force Resisting System- General Shear Walls	
REDUNDANCY	The number of lines of shear walls in each principal direction shall be greater than or equal to 2 for Life Safety and Immediate Occupancy. (Tier 2: Sec. 4.4.2.1.1)	C
	Lateral Force Resisting System- Walls in Wood-Frame Buildings	
STUCCO (EXTERIOR PLASTER) SHEAR WALLS	Multi-story buildings shall not rely on exterior stucco walls as the primary lateral-force-resisting system. (Tier 2: Sec. 4.4.2.7.2)	NA
	Lateral Force Resisting System-General Moment Frames	
REDUNDANCY	The number of lines of moment frames in each principal direction shall be greater than or equal to 2 for Life Safety and Immediate Occupancy. The number of bays of moment frames in each line shall be greater than or equal to 2 for Life Safety and 3 for Immediate Occupancy. (Tier 2: Sec. 4.4.1.1.1)	NA

3.7.16S General Supplemental Structural Checklist

		Compliance
	Connections- Anchorage For Normal Forces	
STIFFNESS OF WALL ANCHORS	Anchors of concrete or masonry walls to wood structural elements shall be installed taut and shall be stiff enough to limit the relative movement between the wall and the diaphragm to no greater than 1/8 inch prior to engagement of the anchors. (Tier 2: Sec. 4.6.1.4)	C
	Connections- Interconnection Of Elements	
GIRDERS	Girders supported by walls or pilasters shall have at least two ties securing the anchor bolts for Life Safety and Immediate Occupancy. (Tier 2: Sec. 4.6.4.2)	NC
CORBEL BEARING	If the frame girders bear on column corbels, the length of bearing shall be greater than 3 inches for Life Safety and Immediate Occupancy. (Tier 2: Sec. 4.6.4.3)	C
CORBEL CONNECTIONS	The frame girders shall not be connected to corbels with welded elements. (Tier 2: Sec. 4.6.4.4)	C
BEAM, GIRDER, AND TRUSS SUPPORTS	Beams, girders, and trusses supported by unreinforced masonry walls or pilasters shall have independent secondary columns for support of vertical loads. (Tier 2: Sec. 4.6.4.5)	NA
	Diaphragms	
CROSS TIES	There shall be continuous cross ties between diaphragm chords. (Tier 2: Sec. 4.5.1.2)	NC
ROOF CHORD CONTINUITY	All chord elements shall be continuous, regardless of changes in roof elevation. (Tier 2: Sec. 4.5.1.3)	C
OPENINGS AT SHEAR WALLS	Diaphragm openings immediately adjacent to the shear walls shall be less than 25 percent of the wall length for Life Safety and 15 percent of the wall length for Immediate Occupancy. (Tier 2: Sec. 4.5.1.4)	C
OPENINGS AT EXTERIOR MASONRY SHEAR WALLS	Diaphragm openings immediately adjacent to exterior masonry shear walls shall not be greater than 8 feet long for Life Safety and 4 feet long for Immediate Occupancy. (Tier 2: Sec. 4.5.1.6)	NA
PLAN IRREGULARITIES	There shall be tensile capacity to develop the strength of the diaphragm at re-entrant corners or other locations of plan irregularities. This statement shall apply to the Immediate Occupancy Performance Level only. (Tier 2: Sec. 4.5.1.7)	NC
DIAPHRAGM REINFORCEMENT AT OPENINGS	There shall be reinforcing around all diaphragm openings larger than 50 percent of the building width in either major plan dimension. This statement shall apply to the Immediate Occupancy Performance Level only. (Tier 2: Sec. 4.5.1.8)	C

	Diaphragms- Wood Diaphragms	
STRAIGHT SHEATHING	All straight sheathed diaphragms shall have aspect ratios less than 2-to-1 for Life Safety and 1-to-1 for Immediate Occupancy in the direction being considered. (Tier 2: Sec. 4.5.2.1)	C
SPANS	All wood diaphragms with spans greater than 24 feet for Life Safety and 12 feet for Immediate Occupancy shall consist of wood structural panels or diagonal sheathing. Wood commercial and industrial buildings may have rod-braced systems. (Tier 2: Sec. 4.5.2.2)	NC
UNBLOCKED DIAPHRAGMS	All diagonally sheathed or unblocked wood structural panel diaphragms shall have horizontal spans less than 40 feet for Life Safety and 30 feet for Immediate Occupancy and shall have aspect ratios less than or equal to 4-to-1 for Life Safety and 3-to-1 for Immediate ccupancy. (Tier 2: Sec. 4.5.2.3)	NC
	Lateral Force Resisting System	
OVERTURNING	All shear walls shall have aspect ratios less than 4-to-1. Wall piers need not be considered. This statement shall apply to the Immediate Occupancy Performance Level only. (Tier 2: Sec. 4.4.2.2.4)	C
CONFINEMENT REINFORCING	For shear walls with aspect ratios greater than 2-to-1, the boundary elements shall be confined with spirals or ties with spacing less than 8db. This statement shall apply to the Immediate Occupancy Performance Level only. (Tier 2: Sec. 4.4.2.2.5)	C
WALL THICKNESS	Thickness of bearing walls shall not be less than 1/25 the unsupported height or length, whichever is shorter, nor less than 4 inches. This statement shall apply to the Immediate Occupancy Performance Level only. (Tier 2: Sec. 4.4.2.2.7)	NC
	Lateral Force Resisting System- Reinforced Masonry Shear Walls	
REINFORCING AT OPENINGS	All wall openings that interrupt rebar shall have trim reinforcing on all sides. This statement shall apply to the Immediate Occupancy Performance Level only. (Tier 2: Sec. 4.4.2.4.3)	C
	Lateral Force Resisting System-Concrete Shear Walls	
REINFORCING AT OPENINGS	There shall be added trim reinforcement around all wall openings with a dimension greater than three times the thickness of the wall. This statement shall apply to the Immediate Occupancy Performance Level only. (Tier 2: Sec. 4.4.2.2.6)	C
WALL CONNECTIONS	There shall be a positive connection between the shear walls and the steel beams and columns for Life Safety and the connection shall be able to develop the strength of the walls for Immediate Occupancy. (Tier 2: Sec. 4.4.2.2.8)	NA

3.7.13 Reinforced Masonry Bearing Walls with Flexible Diaphragms

	Building System	Compliance
LOAD PATH	The structure shall contain a minimum of one complete load path for Life Safety and Immediate Occupancy for seismic force effects from any horizontal direction that serves to transfer the inertial forces from the mass to the foundation. (Tier 2: Sec. 4.3.1.1)	C
ADJACENT BUILDINGS	The clear distance between the building being evaluated and any adjacent building shall be greater than 4 percent of the height of the shorter building for Life Safety and Immediate Occupancy. (Tier 2: Sec. 4.3.1.2)	C
MEZZANINES	Interior mezzanine levels shall be braced independently from the main structure, or shall be anchored to the lateral-force-resisting elements of the main structure. (Tier 2: Sec. 4.3.1.3)	NA
WEAK STORY	The strength of the lateral-force-resisting system in any story shall not be less than 80 percent of the strength in an adjacent story, above or below, for Life Safety and Immediate Occupancy. (Tier 2: Sec. 4.3.2.1)	NA
SOFT STORY	The stiffness of the lateral-force-resisting system in any story shall not be less than 70 percent of the lateral-force-resisting system stiffness in an adjacent story above or below, or less than 80 percent of the average lateral-force-resisting system stiffness of the three stories above or below for Life Safety and Immediate Occupancy. (Tier 2: Sec. 4.3.2.2)	NA
GEOMETRY	There shall be no changes in horizontal dimension of the lateral-force-resisting system of more than 30 percent in a story relative to adjacent stories for Life Safety and Immediate Occupancy, excluding one-story penthouses and mezzanines. (Tier 2: Sec. 4.3.2.3)	NA
VERTICAL DISCONTINUITIES	All vertical elements in the lateral-force-resisting system shall be continuous to the foundation. (Tier 2: Sec. 4.3.2.4)	C
MASS	There shall be no change in effective mass more than 50 percent from one story to the next for Life Safety and Immediate Occupancy. Light roofs, penthouses, and mezzanines need not be considered. (Tier 2: Sec. 4.3.2.5)	NA
DETERIORATION OF WOOD	There shall be no signs of decay, shrinkage, splitting, fire damage, or sagging in any of the wood members, and none of the metal connection hardware shall be deteriorated, broken, or loose. (Tier 2: Sec. 4.3.3.1)	C
MASONRY UNITS	There shall be no visible deterioration of masonry units. (Tier 2: Sec. 4.3.3.7)	C
MASONRY JOINTS	The mortar shall not be easily scraped away from the joints by hand with a metal tool, and there shall be no areas of eroded mortar. (Tier 2: Sec. 4.3.3.8)	C

REINFORCED MASONRY WALL CRACKS	All existing diagonal cracks in wall elements shall be less than 1/8 inch for Life Safety and 1/16 inch for Immediate Occupancy, shall not be concentrated in one location, and shall not form an X pattern. (Tier 2: Sec. 4.3.3.10)	NA
	Connections	
WALL ANCHORAGE	Exterior concrete or masonry walls that are dependent on the diaphragm for lateral support shall be anchored for out-of-plane forces at each diaphragm level with steel anchors, reinforcing dowels, or straps that are developed into the diaphragm. Connections shall have adequate strength to resist the connection force calculated in the Quick Check procedure of Section 3.5.3.7. (Tier 2: Sec. 4.6.1.1)	C
WOOD LEDGERS	The connection between the wall panels and the diaphragm shall not induce cross-grain bending or tension in the wood ledgers. (Tier 2: Sec. 4.6.1.2)	NC
TRANSFER TO SHEAR WALLS	Diaphragms shall be connected for transfer of loads to the shear walls for Life Safety and the connections shall be able to develop the lesser of the shear strength of the walls or diaphragms for Immediate Occupancy. (Tier 2: Sec. 4.6.2.1)	C
FOUNDATION DOWELS	Wall reinforcement shall be doweled into the foundation for Life Safety, and the dowels shall be able to develop the lesser of the strength of the walls or the uplift capacity of the foundation for Immediate Occupancy. (Tier 2: Sec. 4.6.3.5)	C
GIRDER/COLUMN CONNECTION	There shall be a positive connection utilizing plates, connection hardware, or straps between the girder and the column support. (Tier 2: Sec. 4.6.4.1)	C
	Lateral Force Resisting System	
REDUNDANCY	The number of lines of shear walls in each principal direction shall be greater than or equal to 2 for Life Safety and Immediate Occupancy. (Tier 2: Sec. 4.4.2.1.1)	C
SHEAR STRESS CHECK	The shear stress in the reinforced masonry shear walls, calculated using the Quick Check procedure of Section 3.5.3.3, shall be less than 70 psi for Life Safety and Immediate Occupancy. (Tier 2: Sec. 4.4.2.4.1)	C
REINFORCING STEEL	The total vertical and horizontal reinforcing steel ratio in reinforced masonry walls shall be greater than 0.002 for Life Safety and Immediate Occupancy of the wall with the minimum of 0.0007 for Life Safety and Immediate Occupancy in either of the two directions; the spacing of reinforcing steel shall be less than 48 inches for Life Safety and Immediate Occupancy; and all vertical bars shall extend to the top of the walls. (Tier 2: Sec. 4.4.2.4.2)	C

3.7.13 Reinforced Masonry Bearing Walls with Flexible Diaphragms

	Building System	Compliance
LOAD PATH	The structure shall contain a minimum of one complete load path for Life Safety and Immediate Occupancy for seismic force effects from any horizontal direction that serves to transfer the inertial forces from the mass to the foundation. (Tier 2: Sec. 4.3.1.1)	C
ADJACENT BUILDINGS	The clear distance between the building being evaluated and any adjacent building shall be greater than 4 percent of the height of the shorter building for Life Safety and Immediate Occupancy. (Tier 2: Sec. 4.3.1.2)	C
MEZZANINES	Interior mezzanine levels shall be braced independently from the main structure, or shall be anchored to the lateral-force-resisting elements of the main structure. (Tier 2: Sec. 4.3.1.3)	NA
WEAK STORY	The strength of the lateral-force-resisting system in any story shall not be less than 80 percent of the strength in an adjacent story, above or below, for Life Safety and Immediate Occupancy. (Tier 2: Sec. 4.3.2.1)	NA
SOFT STORY	The stiffness of the lateral-force-resisting system in any story shall not be less than 70 percent of the lateral-force-resisting system stiffness in an adjacent story above or below, or less than 80 percent of the average lateral-force-resisting system stiffness of the three stories above or below for Life Safety and Immediate Occupancy. (Tier 2: Sec. 4.3.2.2)	NA
GEOMETRY	There shall be no changes in horizontal dimension of the lateral-force-resisting system of more than 30 percent in a story relative to adjacent stories for Life Safety and Immediate Occupancy, excluding one-story penthouses and mezzanines. (Tier 2: Sec. 4.3.2.3)	C
VERTICAL DISCONTINUITIES	All vertical elements in the lateral-force-resisting system shall be continuous to the foundation. (Tier 2: Sec. 4.3.2.4)	NA
MASS	There shall be no change in effective mass more than 50 percent from one story to the next for Life Safety and Immediate Occupancy. Light roofs, penthouses, and mezzanines need not be considered. (Tier 2: Sec. 4.3.2.5)	NA
DETERIORATION OF WOOD	There shall be no signs of decay, shrinkage, splitting, fire damage, or sagging in any of the wood members, and none of the metal connection hardware shall be deteriorated, broken, or loose. (Tier 2: Sec. 4.3.3.1)	C
MASONRY UNITS	There shall be no visible deterioration of masonry units. (Tier 2: Sec. 4.3.3.7)	C
MASONRY JOINTS	The mortar shall not be easily scraped away from the joints by hand with a metal tool, and there shall be no areas of eroded mortar. (Tier 2: Sec. 4.3.3.8)	C

REINFORCED MASONRY WALL CRACKS	All existing diagonal cracks in wall elements shall be less than 1/8 inch for Life Safety and 1/16 inch for Immediate Occupancy, shall not be concentrated in one location, and shall not form an X pattern. (Tier 2: Sec. 4.3.3.10)	NA
	Connections	
WALL ANCHORAGE	Exterior concrete or masonry walls that are dependent on the diaphragm for lateral support shall be anchored for out-of-plane forces at each diaphragm level with steel anchors, reinforcing dowels, or straps that are developed into the diaphragm. Connections shall have adequate strength to resist the connection force calculated in the Quick Check procedure of Section 3.5.3.7. (Tier 2: Sec. 4.6.1.1)	C
WOOD LEDGERS	The connection between the wall panels and the diaphragm shall not induce cross-grain bending or tension in the wood ledgers. (Tier 2: Sec. 4.6.1.2)	NC
TRANSFER TO SHEAR WALLS	Diaphragms shall be connected for transfer of loads to the shear walls for Life Safety and the connections shall be able to develop the lesser of the shear strength of the walls or diaphragms for Immediate Occupancy. (Tier 2: Sec. 4.6.2.1)	C
FOUNDATION DOWELS	Wall reinforcement shall be doweled into the foundation for Life Safety, and the dowels shall be able to develop the lesser of the strength of the walls or the uplift capacity of the foundation for Immediate Occupancy. (Tier 2: Sec. 4.6.3.5)	C
GIRDER/COLUMN CONNECTION	There shall be a positive connection utilizing plates, connection hardware, or straps between the girder and the column support. (Tier 2: Sec. 4.6.4.1)	NA
	Lateral Force Resisting System	
REDUNDANCY	The number of lines of shear walls in each principal direction shall be greater than or equal to 2 for Life Safety and Immediate Occupancy. (Tier 2: Sec. 4.4.2.1.1)	C
SHEAR STRESS CHECK	The shear stress in the reinforced masonry shear walls, calculated using the Quick Check procedure of Section 3.5.3.3, shall be less than 70 psi for Life Safety and Immediate Occupancy. (Tier 2: Sec. 4.4.2.4.1)	C
REINFORCING STEEL	The total vertical and horizontal reinforcing steel ratio in reinforced masonry walls shall be greater than 0.002 for Life Safety and Immediate Occupancy of the wall with the minimum of 0.0007 for Life Safety and Immediate Occupancy in either of the two directions; the spacing of reinforcing steel shall be less than 48 inches for Life Safety and Immediate Occupancy; and all vertical bars shall extend to the top of the walls. (Tier 2: Sec. 4.4.2.4.2)	C

3.7.13 Reinforced Masonry Bearing Walls with Flexible Diaphragms

	Building System	Compliance
LOAD PATH	The structure shall contain a minimum of one complete load path for Life Safety and Immediate Occupancy for seismic force effects from any horizontal direction that serves to transfer the inertial forces from the mass to the foundation. (Tier 2: Sec. 4.3.1.1)	C
ADJACENT BUILDINGS	The clear distance between the building being evaluated and any adjacent building shall be greater than 4 percent of the height of the shorter building for Life Safety and Immediate Occupancy. (Tier 2: Sec. 4.3.1.2)	C
MEZZANINES	Interior mezzanine levels shall be braced independently from the main structure, or shall be anchored to the lateral-force-resisting elements of the main structure. (Tier 2: Sec. 4.3.1.3)	NA
WEAK STORY	The strength of the lateral-force-resisting system in any story shall not be less than 80 percent of the strength in an adjacent story, above or below, for Life Safety and Immediate Occupancy. (Tier 2: Sec. 4.3.2.1)	NA
SOFT STORY	The stiffness of the lateral-force-resisting system in any story shall not be less than 70 percent of the lateral-force-resisting system stiffness in an adjacent story above or below, or less than 80 percent of the average lateral-force-resisting system stiffness of the three stories above or below for Life Safety and Immediate Occupancy. (Tier 2: Sec. 4.3.2.2)	NA
GEOMETRY	There shall be no changes in horizontal dimension of the lateral-force-resisting system of more than 30 percent in a story relative to adjacent stories for Life Safety and Immediate Occupancy, excluding one-story penthouses and mezzanines. (Tier 2: Sec. 4.3.2.3)	C
VERTICAL DISCONTINUITIES	All vertical elements in the lateral-force-resisting system shall be continuous to the foundation. (Tier 2: Sec. 4.3.2.4)	C
MASS	There shall be no change in effective mass more than 50 percent from one story to the next for Life Safety and Immediate Occupancy. Light roofs, penthouses, and mezzanines need not be considered. (Tier 2: Sec. 4.3.2.5)	NA
DETERIORATION OF WOOD	There shall be no signs of decay, shrinkage, splitting, fire damage, or sagging in any of the wood members, and none of the metal connection hardware shall be deteriorated, broken, or loose. (Tier 2: Sec. 4.3.3.1)	C
MASONRY UNITS	There shall be no visible deterioration of masonry units. (Tier 2: Sec. 4.3.3.7)	C
MASONRY JOINTS	The mortar shall not be easily scraped away from the joints by hand with a metal tool, and there shall be no areas of eroded mortar. (Tier 2: Sec. 4.3.3.8)	C

REINFORCED MASONRY WALL CRACKS	All existing diagonal cracks in wall elements shall be less than 1/8 inch for Life Safety and 1/16 inch for Immediate Occupancy, shall not be concentrated in one location, and shall not form an X pattern. (Tier 2: Sec. 4.3.3.10)	C
	Connections	
WALL ANCHORAGE	Exterior concrete or masonry walls that are dependent on the diaphragm for lateral support shall be anchored for out-of-plane forces at each diaphragm level with steel anchors, reinforcing dowels, or straps that are developed into the diaphragm. Connections shall have adequate strength to resist the connection force calculated in the Quick Check procedure of Section 3.5.3.7. (Tier 2: Sec. 4.6.1.1)	C
WOOD LEDGERS	The connection between the wall panels and the diaphragm shall not induce cross-grain bending or tension in the wood ledgers. (Tier 2: Sec. 4.6.1.2)	C
TRANSFER TO SHEAR WALLS	Diaphragms shall be connected for transfer of loads to the shear walls for Life Safety and the connections shall be able to develop the lesser of the shear strength of the walls or diaphragms for Immediate Occupancy. (Tier 2: Sec. 4.6.2.1)	C
FOUNDATION DOWELS	Wall reinforcement shall be doweled into the foundation for Life Safety, and the dowels shall be able to develop the lesser of the strength of the walls or the uplift capacity of the foundation for Immediate Occupancy. (Tier 2: Sec. 4.6.3.5)	C
GIRDER/COLUMN CONNECTION	There shall be a positive connection utilizing plates, connection hardware, or straps between the girder and the column support. (Tier 2: Sec. 4.6.4.1)	C
	Lateral Force Resisting System	
REDUNDANCY	The number of lines of shear walls in each principal direction shall be greater than or equal to 2 for Life Safety and Immediate Occupancy. (Tier 2: Sec. 4.4.2.1.1)	C
SHEAR STRESS CHECK	The shear stress in the reinforced masonry shear walls, calculated using the Quick Check procedure of Section 3.5.3.3, shall be less than 70 psi for Life Safety and Immediate Occupancy. (Tier 2: Sec. 4.4.2.4.1)	C
REINFORCING STEEL	The total vertical and horizontal reinforcing steel ratio in reinforced masonry walls shall be greater than 0.002 for Life Safety and Immediate Occupancy of the wall with the minimum of 0.0007 for Life Safety and Immediate Occupancy in either of the two directions; the spacing of reinforcing steel shall be less than 48 inches for Life Safety and Immediate Occupancy; and all vertical bars shall extend to the top of the walls. (Tier 2: Sec. 4.4.2.4.2)	C

3.7.13 Reinforced Masonry Bearing Walls with Flexible Diaphragms

	Building System	Compliance
LOAD PATH	The structure shall contain a minimum of one complete load path for Life Safety and Immediate Occupancy for seismic force effects from any horizontal direction that serves to transfer the inertial forces from the mass to the foundation. (Tier 2: Sec. 4.3.1.1)	C
ADJACENT BUILDINGS	The clear distance between the building being evaluated and any adjacent building shall be greater than 4 percent of the height of the shorter building for Life Safety and Immediate Occupancy. (Tier 2: Sec. 4.3.1.2)	NA
MEZZANINES	Interior mezzanine levels shall be braced independently from the main structure, or shall be anchored to the lateral-force-resisting elements of the main structure. (Tier 2: Sec. 4.3.1.3)	NA
WEAK STORY	The strength of the lateral-force-resisting system in any story shall not be less than 80 percent of the strength in an adjacent story, above or below, for Life Safety and Immediate Occupancy. (Tier 2: Sec. 4.3.2.1)	NA
SOFT STORY	The stiffness of the lateral-force-resisting system in any story shall not be less than 70 percent of the lateral-force-resisting system stiffness in an adjacent story above or below, or less than 80 percent of the average lateral-force-resisting system stiffness of the three stories above or below for Life Safety and Immediate Occupancy. (Tier 2: Sec. 4.3.2.2)	NA
GEOMETRY	There shall be no changes in horizontal dimension of the lateral-force-resisting system of more than 30 percent in a story relative to adjacent stories for Life Safety and Immediate Occupancy, excluding one-story penthouses and mezzanines. (Tier 2: Sec. 4.3.2.3)	C
VERTICAL DISCONTINUITIES	All vertical elements in the lateral-force-resisting system shall be continuous to the foundation. (Tier 2: Sec. 4.3.2.4)	C
MASS	There shall be no change in effective mass more than 50 percent from one story to the next for Life Safety and Immediate Occupancy. Light roofs, penthouses, and mezzanines need not be considered. (Tier 2: Sec. 4.3.2.5)	NA
DETERIORATION OF WOOD	There shall be no signs of decay, shrinkage, splitting, fire damage, or sagging in any of the wood members, and none of the metal connection hardware shall be deteriorated, broken, or loose. (Tier 2: Sec. 4.3.3.1)	C
MASONRY UNITS	There shall be no visible deterioration of masonry units. (Tier 2: Sec. 4.3.3.7)	C
MASONRY JOINTS	The mortar shall not be easily scraped away from the joints by hand with a metal tool, and there shall be no areas of eroded mortar. (Tier 2: Sec. 4.3.3.8)	C

REINFORCED MASONRY WALL CRACKS	All existing diagonal cracks in wall elements shall be less than 1/8 inch for Life Safety and 1/16 inch for Immediate Occupancy, shall not be concentrated in one location, and shall not form an X pattern. (Tier 2: Sec. 4.3.3.10)	NA
	Connections	
WALL ANCHORAGE	Exterior concrete or masonry walls that are dependent on the diaphragm for lateral support shall be anchored for out-of-plane forces at each diaphragm level with steel anchors, reinforcing dowels, or straps that are developed into the diaphragm. Connections shall have adequate strength to resist the connection force calculated in the Quick Check procedure of Section 3.5.3.7. (Tier 2: Sec. 4.6.1.1)	C
WOOD LEDGERS	The connection between the wall panels and the diaphragm shall not induce cross-grain bending or tension in the wood ledgers. (Tier 2: Sec. 4.6.1.2)	NA
TRANSFER TO SHEAR WALLS	Diaphragms shall be connected for transfer of loads to the shear walls for Life Safety and the connections shall be able to develop the lesser of the shear strength of the walls or diaphragms for Immediate Occupancy. (Tier 2: Sec. 4.6.2.1)	C
FOUNDATION DOWELS	Wall reinforcement shall be doweled into the foundation for Life Safety, and the dowels shall be able to develop the lesser of the strength of the walls or the uplift capacity of the foundation for Immediate Occupancy. (Tier 2: Sec. 4.6.3.5)	C
GIRDER/COLUMN CONNECTION	There shall be a positive connection utilizing plates, connection hardware, or straps between the girder and the column support. (Tier 2: Sec. 4.6.4.1)	C
	Lateral Force Resisting System	
REDUNDANCY	The number of lines of shear walls in each principal direction shall be greater than or equal to 2 for Life Safety and Immediate Occupancy. (Tier 2: Sec. 4.4.2.1.1)	C
SHEAR STRESS CHECK	The shear stress in the reinforced masonry shear walls, calculated using the Quick Check procedure of Section 3.5.3.3, shall be less than 70 psi for Life Safety and Immediate Occupancy. (Tier 2: Sec. 4.4.2.4.1)	NC
REINFORCING STEEL	The total vertical and horizontal reinforcing steel ratio in reinforced masonry walls shall be greater than 0.002 for Life Safety and Immediate Occupancy of the wall with the minimum of 0.0007 for Life Safety and Immediate Occupancy in either of the two directions; the spacing of reinforcing steel shall be less than 48 inches for Life Safety and Immediate Occupancy; and all vertical bars shall extend to the top of the walls. (Tier 2: Sec. 4.4.2.4.2)	C

3.7.13S Reinforced Masonry Bearing Walls with Flexible Diaphragms

		Compliance
	Connections	
STIFFNESS OF WALL ANCHORS	Anchors of concrete or masonry walls to wood structural elements shall be installed taut and shall be stiff enough to limit the relative movement between the wall and the diaphragm to no greater than 1/8 inch prior to engagement of the anchors. (Tier 2: Sec. 4.6.1.4)	C
	Diaphragms	
CROSS TIES	There shall be continuous cross ties between diaphragm chords. (Tier 2: Sec. 4.5.1.2)	C
OPENINGS AT SHEAR WALLS	Diaphragm openings immediately adjacent to the shear walls shall be less than 25 percent of the wall length for Life Safety and 15 percent of the wall length for Immediate Occupancy. (Tier 2: Sec. 4.5.1.4)	NA
OPENINGS AT EXTERIOR MASONRY SHEAR WALLS	Diaphragm openings immediately adjacent to exterior masonry shear walls shall not be greater than 8 feet long for Life Safety and 4 feet long for Immediate Occupancy. (Tier 2: Sec. 4.5.1.6)	NA
PLAN IRREGULARITIES	There shall be tensile capacity to develop the strength of the diaphragm at re-entrant corners or other locations of plan irregularities. This statement shall apply to the Immediate Occupancy Performance Level only. (Tier 2: Sec. 4.5.1.7)	NA
DIAPHRAGM REINFORCEMENT AT OPENINGS	There shall be reinforcing around all diaphragm openings larger than 50 percent of the building width in either major plan dimension. This statement shall apply to the Immediate Occupancy Performance Level only. (Tier 2: Sec. 4.5.1.8)	NA
STRAIGHT SHEATHING	All straight sheathed diaphragms shall have aspect ratios less than 2- to-1 for Life Safety and 1-to-1 for Immediate Occupancy in the direction being considered. (Tier 2: Sec. 4.5.2.1)	C
SPANS	All wood diaphragms with spans greater than 24 feet for Life Safety and 12 feet for Immediate Occupancy shall consist of wood structural panels or diagonal sheathing. (Tier 2: Sec. 4.5.2.2)	NA
UNBLOCKED DIAPHRAGMS	All diagonally sheathed or unblocked wood structural panel diaphragms shall have horizontal spans less than 40 feet for Life Safety and 30 feet for Immediate Occupancy and shall have aspect ratios less than or equal to 4-to-1 for Life Safety and 3-to-1 for Immediate Occupancy. (Tier 2: Sec. 4.5.2.3)	NA
NON-CONCRETE FILLED DIAPHRAGMS	Untopped metal deck diaphragms or metal deck diaphragms with fill other than concrete shall consist of horizontal spans of less than 40 feet and shall have span/depth ratios less than 4-to-1. This statement shall apply to the Immediate Occupancy Performance Level only. (Tier 2: Sec. 4.5.3.1)	NA
OTHER DIAPHRAGMS	The diaphragm shall not consist of a system other than wood, metal deck, concrete, or horizontal bracing. (Tier 2: Sec. 4.5.7.1)	C

Lateral Force Resisting System		
REINFORCING AT OPENINGS	All wall openings that interrupt rebar shall have trim reinforcing on all sides. This statement shall apply to the Immediate Occupancy Performance Level only. (Tier 2: Sec. 4.4.2.4.3)	NA
PROPORTIONS	The height-to-thickness ratio of the shear walls at each story shall be less than 30. This statement shall apply to the Immediate Occupancy Performance Level only. (Tier 2: Sec. 4.4.2.4.4)	C

3.7.13S Reinforced Masonry Bearing Walls with Flexible Diaphragms

		Compliance
	Connections	
STIFFNESS OF WALL ANCHORS	Anchors of concrete or masonry walls to wood structural elements shall be installed taut and shall be stiff enough to limit the relative movement between the wall and the diaphragm to no greater than 1/8 inch prior to engagement of the anchors. (Tier 2: Sec. 4.6.1.4)	C
	Diaphragms	
CROSS TIES	There shall be continuous cross ties between diaphragm chords. (Tier 2: Sec. 4.5.1.2)	C
OPENINGS AT SHEAR WALLS	Diaphragm openings immediately adjacent to the shear walls shall be less than 25 percent of the wall length for Life Safety and 15 percent of the wall length for Immediate Occupancy. (Tier 2: Sec. 4.5.1.4)	C
OPENINGS AT EXTERIOR MASONRY SHEAR WALLS	Diaphragm openings immediately adjacent to exterior masonry shear walls shall not be greater than 8 feet long for Life Safety and 4 feet long for Immediate Occupancy. (Tier 2: Sec. 4.5.1.6)	C
PLAN IRREGULARITIES	There shall be tensile capacity to develop the strength of the diaphragm at re-entrant corners or other locations of plan irregularities. This statement shall apply to the Immediate Occupancy Performance Level only. (Tier 2: Sec. 4.5.1.7)	NA
DIAPHRAGM REINFORCEMENT AT OPENINGS	There shall be reinforcing around all diaphragm openings larger than 50 percent of the building width in either major plan dimension. This statement shall apply to the Immediate Occupancy Performance Level only. (Tier 2: Sec. 4.5.1.8)	C
STRAIGHT SHEATHING	All straight sheathed diaphragms shall have aspect ratios less than 2- to-1 for Life Safety and 1-to-1 for Immediate Occupancy in the direction being considered. (Tier 2: Sec. 4.5.2.1)	NA
SPANS	All wood diaphragms with spans greater than 24 feet for Life Safety and 12 feet for Immediate Occupancy shall consist of wood structural panels or diagonal sheathing. (Tier 2: Sec. 4.5.2.2)	C
UNBLOCKED DIAPHRAGMS	All diagonally sheathed or unblocked wood structural panel diaphragms shall have horizontal spans less than 40 feet for Life Safety and 30 feet for Immediate Occupancy and shall have aspect ratios less than or equal to 4-to-1 for Life Safety and 3-to-1 for Immediate Occupancy. (Tier 2: Sec. 4.5.2.3)	NA
NON-CONCRETE FILLED DIAPHRAGMS	Untopped metal deck diaphragms or metal deck diaphragms with fill other than concrete shall consist of horizontal spans of less than 40 feet and shall have span/depth ratios less than 4-to-1. This statement shall apply to the Immediate Occupancy Performance Level only. (Tier 2: Sec. 4.5.3.1)	NA
OTHER DIAPHRAGMS	The diaphragm shall not consist of a system other than wood, metal deck, concrete, or horizontal bracing. (Tier 2: Sec. 4.5.7.1)	C

Lateral Force Resisting System

REINFORCING AT OPENINGS	All wall openings that interrupt rebar shall have trim reinforcing on all sides. This statement shall apply to the Immediate Occupancy Performance Level only. (Tier 2: Sec. 4.4.2.4.3)	C
PROPORTIONS	The height-to-thickness ratio of the shear walls at each story shall be less than 30. This statement shall apply to the Immediate Occupancy Performance Level only. (Tier 2: Sec. 4.4.2.4.4)	C

3.7.13S Reinforced Masonry Bearing Walls with Flexible Diaphragms

		Compliance
	Connections	
STIFFNESS OF WALL ANCHORS	Anchors of concrete or masonry walls to wood structural elements shall be installed taut and shall be stiff enough to limit the relative movement between the wall and the diaphragm to no greater than 1/8 inch prior to engagement of the anchors. (Tier 2: Sec. 4.6.1.4)	C
	Diaphragms	
CROSS TIES	There shall be continuous cross ties between diaphragm chords. (Tier 2: Sec. 4.5.1.2)	C
OPENINGS AT SHEAR WALLS	Diaphragm openings immediately adjacent to the shear walls shall be less than 25 percent of the wall length for Life Safety and 15 percent of the wall length for Immediate Occupancy. (Tier 2: Sec. 4.5.1.4)	C
OPENINGS AT EXTERIOR MASONRY SHEAR WALLS	Diaphragm openings immediately adjacent to exterior masonry shear walls shall not be greater than 8 feet long for Life Safety and 4 feet long for Immediate Occupancy. (Tier 2: Sec. 4.5.1.6)	C
PLAN IRREGULARITIES	There shall be tensile capacity to develop the strength of the diaphragm at re-entrant corners or other locations of plan irregularities. This statement shall apply to the Immediate Occupancy Performance Level only. (Tier 2: Sec. 4.5.1.7)	NA
DIAPHRAGM REINFORCEMENT AT OPENINGS	There shall be reinforcing around all diaphragm openings larger than 50 percent of the building width in either major plan dimension. This statement shall apply to the Immediate Occupancy Performance Level only. (Tier 2: Sec. 4.5.1.8)	NA
STRAIGHT SHEATHING	All straight sheathed diaphragms shall have aspect ratios less than 2- to-1 for Life Safety and 1-to-1 for Immediate Occupancy in the direction being considered. (Tier 2: Sec. 4.5.2.1)	NA
SPANS	All wood diaphragms with spans greater than 24 feet for Life Safety and 12 feet for Immediate Occupancy shall consist of wood structural panels or diagonal sheathing. (Tier 2: Sec. 4.5.2.2)	C
UNBLOCKED DIAPHRAGMS	All diagonally sheathed or unblocked wood structural panel diaphragms shall have horizontal spans less than 40 feet for Life Safety and 30 feet for Immediate Occupancy and shall have aspect ratios less than or equal to 4-to-1 for Life Safety and 3-to-1 for Immediate Occupancy. (Tier 2: Sec. 4.5.2.3)	C
NON-CONCRETE FILLED DIAPHRAGMS	Untopped metal deck diaphragms or metal deck diaphragms with fill other than concrete shall consist of horizontal spans of less than 40 feet and shall have span/depth ratios less than 4-to-1. This statement shall apply to the Immediate Occupancy Performance Level only. (Tier 2: Sec. 4.5.3.1)	NA
OTHER DIAPHRAGMS	The diaphragm shall not consist of a system other than wood, metal deck, concrete, or horizontal bracing. (Tier 2: Sec. 4.5.7.1)	C

Lateral Force Resisting System		
REINFORCING AT OPENINGS	All wall openings that interrupt rebar shall have trim reinforcing on all sides. This statement shall apply to the Immediate Occupancy Performance Level only. (Tier 2: Sec. 4.4.2.4.3)	C
PROPORTIONS	The height-to-thickness ratio of the shear walls at each story shall be less than 30. This statement shall apply to the Immediate Occupancy Performance Level only. (Tier 2: Sec. 4.4.2.4.4)	C

3.7.13S Reinforced Masonry Bearing Walls with Flexible Diaphragms

		Compliance
	Connections	
STIFFNESS OF WALL ANCHORS	Anchors of concrete or masonry walls to wood structural elements shall be installed taut and shall be stiff enough to limit the relative movement between the wall and the diaphragm to no greater than 1/8 inch prior to engagement of the anchors. (Tier 2: Sec. 4.6.1.4)	C
	Diaphragms	
CROSS TIES	There shall be continuous cross ties between diaphragm chords. (Tier 2: Sec. 4.5.1.2)	NA
OPENINGS AT SHEAR WALLS	Diaphragm openings immediately adjacent to the shear walls shall be less than 25 percent of the wall length for Life Safety and 15 percent of the wall length for Immediate Occupancy. (Tier 2: Sec. 4.5.1.4)	NC
OPENINGS AT EXTERIOR MASONRY SHEAR WALLS	Diaphragm openings immediately adjacent to exterior masonry shear walls shall not be greater than 8 feet long for Life Safety and 4 feet long for Immediate Occupancy. (Tier 2: Sec. 4.5.1.6)	NA
PLAN IRREGULARITIES	There shall be tensile capacity to develop the strength of the diaphragm at re-entrant corners or other locations of plan irregularities. This statement shall apply to the Immediate Occupancy Performance Level only. (Tier 2: Sec. 4.5.1.7)	NA
DIAPHRAGM REINFORCEMENT AT OPENINGS	There shall be reinforcing around all diaphragm openings larger than 50 percent of the building width in either major plan dimension. This statement shall apply to the Immediate Occupancy Performance Level only. (Tier 2: Sec. 4.5.1.8)	NA
STRAIGHT SHEATHING	All straight sheathed diaphragms shall have aspect ratios less than 2- to-1 for Life Safety and 1-to-1 for Immediate Occupancy in the direction being considered. (Tier 2: Sec. 4.5.2.1)	NA
SPANS	All wood diaphragms with spans greater than 24 feet for Life Safety and 12 feet for Immediate Occupancy shall consist of wood structural panels or diagonal sheathing. (Tier 2: Sec. 4.5.2.2)	NA
UNBLOCKED DIAPHRAGMS	All diagonally sheathed or unblocked wood structural panel diaphragms shall have horizontal spans less than 40 feet for Life Safety and 30 feet for Immediate Occupancy and shall have aspect ratios less than or equal to 4-to-1 for Life Safety and 3-to-1 for Immediate Occupancy. (Tier 2: Sec. 4.5.2.3)	NA
NON-CONCRETE FILLED DIAPHRAGMS	Untopped metal deck diaphragms or metal deck diaphragms with fill other than concrete shall consist of horizontal spans of less than 40 feet and shall have span/depth ratios less than 4-to-1. This statement shall apply to the Immediate Occupancy Performance Level only. (Tier 2: Sec. 4.5.3.1)	NA
OTHER DIAPHRAGMS	The diaphragm shall not consist of a system other than wood, metal deck, concrete, or horizontal bracing. (Tier 2: Sec. 4.5.7.1)	C

Lateral Force Resisting System		
REINFORCING AT OPENINGS	All wall openings that interrupt rebar shall have trim reinforcing on all sides. This statement shall apply to the Immediate Occupancy Performance Level only. (Tier 2: Sec. 4.4.2.4.3)	C
PROPORTIONS	The height-to-thickness ratio of the shear walls at each story shall be less than 30. This statement shall apply to the Immediate Occupancy Performance Level only. (Tier 2: Sec. 4.4.2.4.4)	C

3.8 Geologic Site Hazards and Foundations Checklist

		Compliance
	Capacity of Foundations	
POLE FOUNDATIONS	Pole foundations shall have a minimum embedment depth of 4 feet for Life Safety and Immediate Occupancy. (Tier 2: Sec. 4.7.3.1)	NA
OVERTURNING	The ratio of the horizontal dimension of the lateral-force-resisting system at the foundation level to the building height (base/height) shall be greater than 0.6Sa• (Tier 2: Sec. 4.7.3.2)	C
TIES BETWEEN FOUNDATION ELEMENTS	The foundation shall have ties adequate to resist seismic forces where footings, piles, and piers are not restrained by beams, slabs, or soils classified as Class A, B, or C. (Section 3.5.2.3.1, Tier 2: Sec. 4.7.3.3)	C
DEEP FOUNDATIONS	Piles and piers shall be capable of transferring the lateral forces between the structure and the soil. This statement shall apply to the Immediate Occupancy Performance Level only. (Tier 2: Sec. 4.7.3.4)	NA
SLOPING SITES	The difference in foundation embedment depth from one side of the building to another shall not exceed one story in height. This statement shall apply to the Immediate Occupancy Performance Level only. (Tier 2: Sec. 4.7.3.5)	C
	Condition of Foundations	
FOUNDATION PERFORMANCE	There shall be no evidence of excessive foundation movement such as settlement or heave that would affect the integrity or strength of the structure. (Tier 2: Sec. 4.7.2.1)	NC
DETERIORATION	There shall not be evidence that foundation elements have deteriorated due to corrosion, sulfate attack, material breakdown, or other reasons in a manner that would affect the integrity or strength of the structure. (Tier 2: Sec. 4.7.2.2)	C
	Geologic Site Hazards	
LIQUEFACTION	Liquefaction-susceptible, saturated, loose granular sils that could jeopardize the building's seismic performance shall not exist in the foundation soils at depths within 50 feet under the building for Life Safety and Immediate Occupancy. (Tier 2: Sec. 4.7.1.1)	C
SLOPE FAILURE	The building site shall be sufficiently remote from potential earthquake-induced slope failures or rockfalls to be unaffected by such failures or shall be capable of accommodating any predicted movements without failure. (Tier 2: Sec. 4.7.1.2)	C
SURFACE FAULT RUPTURE	Surface fault rupture and surface displacement at the building site is not anticipated. (Tier 2: Sec. 4.7.1.3)	C

3.9.1 Basic Nonstructural Component Checklist

		Compliance
	Building Contents and Furnishing	
TALL NARROW CONTENTS	Contents over 4 feet in height with a height-to-depth or height-to-width ratio greater than 3-to-1 shall be anchored to the floor slab or adjacent structural walls. A height-to-depth or height-to-width ratio of up to 4-to-1 is permitted where only the Basic Nonstructural Component Checklist is required by Table 3-2. (Tier 2: Sec. 4.8.11.1)	NC
	Location: Old Chlorine Room, Storage Room	
	Ceiling Systems	
SUPPORT	The integrated suspended ceiling system shall not be used to laterally support the tops of gypsum board, masonry, or hollow clay tile partitions. Gypsum board partitions need not be evaluated where only the Basic Nonstructural Component Checklist is required by Table 3-2. (Tier 2: Sec. 4.8.2.1)	C
	Cladding and Glazing	
CLADDING ANCHORS	Cladding components weighing more than 10 psf shall be mechanically anchored to the exterior wall framing at a spacing equal to or less than 4 feet. A spacing of up to 6 feet is permitted where only the Basic Nonstructural Component checklist is required by Table 3-2 (Tier 2: Sec. 4.8.4.1)	NA
DETERIORATION	There shall be no evidence of deterioration, damage or corrosion in any of the connection elements. (Tier 2: Sec. 4.8.4.2)	NA
CLADDING ISOLATION	For moment frame buildings of steel or concrete, panel connections shall be detailed to accommodate a story drift ratio of 0.02. Panel connection detailing for a story drift ratio of 0.01 is permitted where only the Basic Nonstructural Component Checklist is required by Table 3-2. (Tier 2: Sec. 4.8.4.3)	NA
MULTI-STORY PANELS	For multi-story panels attached at each floor level, panel connections shall be detailed to accommodate a story drift ratio of 0.02. Panel connection detailing for a story drift ratio of 0.01 is permitted where only the Basic Nonstructural Component Checklist is required by Table 3-2. (Tier 2: Sec. 4.8.4.4)	NA
BEARING CONNECTIONS	Where bearing connections are required, there shall be a minimum of two bearing connections for each wall panel. (Tier 2: Sec. 4.8.4.5)	NA
INSERTS	Where inserts are used in concrete connections, the inserts shall be anchored to reinforcing steel or other positive anchorage. (Tier 2: Sec. 4.8.4.6)	NA
PANEL CONNECTIONS	Exterior cladding panels shall be anchored out-of-plane with a minimum of 4 connections for each wall panel. Two connections per wall panel are permitted where only the Basic Nonstructural Component Checklist is required by Table 3-2. (Tier 2: Sec. 4.8.4.7)	NA

	Hazardous Materials Storage and Distribution	
TOXIC SUBSTANCES	Toxic and hazardous substances stored in breakable containers shall be restrained from falling by latched doors, shelf lips, wires, or other methods. (Tier 2: Sec 4.8.15.1)	NA
	Light Fixtures	
EMERGENCY LIGHTING	Emergency lighting shall be anchored or braced to prevent falling during an earthquake. (Tier 2: Sec. 4.8.3.1)	NC
	Masonry Chimneys	
URM CHIMNEYS	No reinforced masonry chimney shall extend above the roof surface more than twice the least dimension of the chimney. A height above the roof surface of up to three times the least dimension of the chimney is permitted where only the Basic Nonstructural Component Checklist is required by Table 3-2. (Tier 2: Sec. 4.8.9.1)	NA
	Masonry Veneer	
SHELF ANGLES	Masonry veneer shall be supported by shelf angles or other elements at each floor 30 feet or more above ground for Life Safety and at each floor above the first floor for Immediate Occupancy. (Tier 2: Sec. 4.8.5.1)	C
WEAKENED PLANES	Masonry veneer shall be anchored to the back-up adjacent to weakened planes, such as at the locations of flashing. (Tier 2: Sec. 4.8.5.3)	NC
DETERIORATION	There shall be no evidence of deterioration, damage or corrosion in any of the connection elements. (Tier 2: Sec. 4.8.5.4)	C
	Mechanical and Electrical Equipment	
EMERGENCY POWER	Equipment used as part of an emergency power system shall be mounted to maintain continued operation after an earthquake. (Tier 2: Sec. 4.8.12.1)	NC
	Backup power influent pump MCC and other room	
HAZARDOUS MATERIAL EQUIPMENT	HVAC or other equipment containing hazardous material shall not have damaged supply lines or unbraced isolation supports. (Tier 2: Sec. 4.8.12.2)	NC
DETERIORATION	There shall be no evidence of deterioration, damage, or corrosion in any of the anchorage or supports of mechanical or electrical equipment. (Tier 2: Sec. 4.8.12.3)	NC
	Pipe under the boiler	
ATTACHED EQUIPMENT	Equipment weighing over 20 lb that is attached to ceilings, walls, or other supports 4 feet above the floor level shall be braced. (Tier 2: Sec 4.8.12.4)	NC
	Parapets, Cornices, Ornamentation, and Appendages	
URM PARAPETS	There shall be no laterally unsupported unreinforced masonry parapets or cornices with height-to-thickness ratios greater than 1.5. A height-to-thickness ratio of up to 2.5 is permitted where only the Basic Nonstructural Component Checklist is required by Table 3-2. (Tier 2: Sec. 4.8.8.1)	NA

CANOPIES	Canopies located at building exits shall be anchored to the structural framing at a spacing of 6 feet or less. An anchorage spacing of up to 10 feet is permitted where only the Basic Nonstructural Component Checklist is required by Table 3-2. (Tier 2: Sec. 4.8.8.2)	NA
	Partitions	
UNREINFORCED MASONRY	Unreinforced masonry or hollow clay tile partitions shall be braded at a spacing equal to or less than 10 feet in levels of low or moderate seismicity and 6 feet in levels of high seismicity. (Tier 2: Sec. 4.8.1.1)	NA
	Piping	
FIRE SUPPRESSION PIPING	Fire suppression piping shall be anchored and braced in accordance with NFPA-13 (NFPA, 1996). (Tier 2: Sec. 4.8.13.1)	NA
FLEXIBLE COUPLINGS	Fluid, gas, and fire suppression piping shall have flexible couplings. (Tier 2: Sec. 4.8.13.2)	NA
	Stairs	
URM WALLS	Walls around stair enclosures shall not consist of unbraced hollow clay tile or unreinforced masonry with a height-to-thickness ratio greater than 12-to-1. A height-to-thickness ratio of up to 15-to-1 is permitted where only the Basic Nonstructural Component Checklist is required by Table 3-2. (Tier 2: Sec. 4.8.10.1)	NA
STAIR DETAILS	In moment frame structures, the connection between the stairs and the structure shall not rely on shallow anchors in concrete. Alternatively, the stair details shall be capable of accommodating the drift calculated using the Quick Check procedure of Section 3.5.3.1 without including tension in the anchors. (Tier 2: Sec. 4.8.10.2)	C

3.9.1S Supplemental Nonstructural Component Checklist

		Compliance
	Building Contents and Furnishing	
FILE CABINETS	File cabinets arranged in groups shall be attached to one another. (Tier 2: Sec. 4.8.11.2)	C
CABINET DOORS AND DRAWERS	Cabinet doors and drawers shall have latches to keep them closed during an earthquake. (Tier 2: Sec. 4.8.11.3)	NC
ACCESS FLOORS	Access floors over 9 inches in height shall be braced. (Tier 2: Sec. 4.8.11.4)	NA
EQUIPMENT ON ACCESS FLOORS	Equipment and computers supported on access floor systems shall be either attached to the structure or fastened to a laterally braced floor system. (Tier 2: Sec. 4.8.11.5)	NC
		In penthouse
	Ceiling Systems	
EDGES	The edges of integrated suspended ceilings shall be separated from enclosing walls by a minimum of 1/2 inch. (Tier 2: Sec. 4.8.2.5)	C
SEISMIC JOINT	The ceiling system shall not extend continuously across any seismic joint. (Tier 2: Sec. 4.8.2.6)	NA
	Cladding and Glazing	
GLAZING	All exterior glazing shall be laminated, annealed or laminated heat-strengthened safety glass or other glazing system that will remain in the frame when glass is cracked. (Tier 2: Sec. 4.8.4.9)	NA
	Concrete Block and Masonry Back-Up Systems	
URM BACK-UP	There shall be no unreinforced masonry back-up. (Tier 2: Sec. 4.8.7.2)	NA
	Ducts	
DUCT BRACING	Rectangular ductwork exceeding 6 square feet in cross-sectional area, and round ducts exceeding 28 inches in diameter, shall be braced. Maximum spacing of transverse bracing shall not exceed 30 feet. Maximum spacing of longitudinal bracing shall not exceed 60 feet. Intermediate supports shall not be considered part of the lateral-force resisting system. (Tier 2: Sec. 4.8.14.2)	NC
DUCT SUPPORT	Ducts shall not be supported by piping or electrical conduit. (Tier 2: Sec. 4.8.14.3)	C
	Elevators	
SUPPORT SYSTEM	All elements of the elevator system shall be anchored. (Tier 2: Sec. 4.8.16.1)	NA

SEISMIC SWITCH	All elevators shall be equipped with seismic switches that will terminate operations when the ground motion exceeds 0.10g. (Tier 2: Sec. 4.8.16.2)	NA
SHAFT WALLS	All elevator shaft walls shall be anchored and reinforced to prevent toppling into the shaft during strong shaking. (Tier 2: Sec. 4.8.16.3)	NA
RETAINER GUARDS	Cable retainer guards on sheaves and drums shall be present to inhibit the displacement of cables. (Tier 2: Sec. 4.8.16.4)	NA
COUNTERWEIGHT RAILS	All counterweight rails and divider beams shall be sized in accordance with ASME A17.1. (Tier 2: Sec. 4.8.16.6)	NA
BRACKETS	The brackets that tie the car rails and the counterweight rail to the building structure shall be sized in accordance with ASME A17.1. (Tier 2: Sec. 4.8.16.7)	NA
SPREADER BRACKET	Spreader brackets shall not be used to resist seismic forces. (Tier 2: Sec. 4.8.16.8)	NA
GO-SLOW ELEVATORS	The building shall have a go-slow elevator system. (Tier 2: Sec. 4.8.16.9)	NA
	Hazardous Materials Storage and Distribution	
GAS CYLINDERS	Compressed gas-cylinders shall be restrained. (Tier 2: Sec. 4.8.15.2)	NA
	Light Fixtures	
PENDANT SUPPORTS	Light fixtures on pendant supports shall be attached at a spacing equal to or less than 6 feet and, if rigidly supported, shall be free to move with the structure to which they are attached without damaging adjoining materials. (Tier 2: Sec. 4.8.3.3)	NC
LENS COVERS	Lens covers on light fixtures shall be attached or supplied with safety devices. (Tier 2: Sec. 4.8.3.4)	C
	Masonry Veneer	
MORTAR	The mortar in masonry veneer shall not be easily scraped away from the joints by hand with a metal tool, and there shall not be significant areas of eroded mortar. (Tier 2: Sec. 4.8.5.5)	C
WEEP HOLES	In veneer braced by stud walls, functioning weep holes and base flashing shall be present. (Tier 2: Sec. 4.8.5.6)	C
STONE CRACKS	There shall be no visible cracks or signs of visible distortion in the stone. (Tier 2: Sec. 4.8.5.7)	NA
	Mechanical and Electrical Equipment	
HEAVY EQUIPMENT	Equipment weighing over 100 pounds shall be anchored to the structure or foundation. (Tier 2: Sec. 4.8.12.6)	NC
		Boilers
ELECTRICAL EQUIPMENT	Electrical equipment and associated wiring shall be laterally braced to the structural system. (Tier 2: Sec. 4.8.12.7)	NC
		Electrical cabinets in MCC room

DOORS	Mechanically operated doors shall be detailed to operate at a story drift ratio of 0.01. (Tier 2: Sec. 4.8.12.8)	NA
	Metal Stud Back-Up Systems	
STUD TRACKS	Stud tracks shall be fastened to structural framing at a spacing equal to or less than 24 inches on center. (Tier 2: Sec. 4.8.6.1)	NA
OPENINGS	Steel studs shall frame window and door openings. (Tier 2: Sec. 4.8.6.2)	NA
	Partitions	
DRIFT	Rigid cementitious partitions shall be detailed to accommodate a drift ratio of 0.02 in steel moment frame, concrete moment frame, and wood frame buildings. Rigid cementitious partitions shall be detailed to accommodate a drift ratio of 0.005 in other buildings. (Tier 2: Sec. 4.8.1.2)	NC
STRUCTURAL SEPARATIONS	Partitions at structural separations shall have seismic or control joints. (Tier 2: Sec. 4.8.1.3)	NC
	Piping	
FLUID AND GAS PIPING	Fluid and gas piping shall be anchored and braced to the structure to prevent breakage in piping. (Tier 2: Sec 4.8.13.3)	NC
		NG pipe
C-CLAMPS	One-sided C-clamps that support piping greater than 2.5 inches in diameter shall be restrained. (Tier 2: Sec. 4.8.13.5)	C

3.9.2 Intermediate Nonstructural Component Checklist

		Compliance
	Ceiling Systems	
LAY-IN TILES	Lay-in tiles used in ceiling panels located at exits and corridors shall be secured with clips. (Tier 2: Sec. 4.8.2.2)	NC
INTEGRATED CEILINGS	Integrated suspended ceilings at exits and corridors or weighing more than 2 pounds per square foot shall be laterally restrained with a minimum of four diagonal wires or rigid members attached to the structure above at a spacing equal to or less than 12 feet. (Tier 2: Sec. 4.8.2.3)	C
SUSPENDED LATH AND PLASTER	Ceilings consisting of suspended lath and plaster or gypsum board shall be attached to resist seismic forces for every 12 square feet of area. (Tier 2: Sec. 4.8.2.4)	NA
	Cladding and Glazing	
LAMINATED SAFETY GLASS (GLAZING)	Glazing in curtain walls and individual panes over 16 square feet in area, located up to a height of 10 feet above an exterior walking surface, shall have safety glazing. Such glazing located over 10 feet above an exterior walking surface shall be laminated, annealed, or laminated heat-strengthened safety glass that will remain in the frame when glass is cracked. (Tier 2: Sec. 4.8.4.8)	NC
	Ducts	
STAIR AND SMOKE DUCTS	Stair pressurization and smoke control ducts shall be braced and shall have flexible connections at seismic joints. (Tier 2: Sec. 4.8.14.1)	NC
	Light Fixtures	
INDEPENDENT SUPPORT	Light fixtures in suspended grid ceilings shall be supported independently of the ceiling suspension system by a minimum of two wires at diagonally opposite corners of the fixtures. (Tier 2: Sec. 4.8.3.2)	C
	Masonry Chimneys	
ANCHORAGE	Masonry chimneys shall be anchored at each floor level and the roof. (Tier 2: Sec. 4.8.9.2)	NA
	Mechanical and Electrical Equipment	
VIBRATION ISOLATORS	Equipment mounted on vibration isolators shall be equipped with restraints or snubbers. (Tier 2: Sec. 4.8.12.5)	C
	Parapets, Cornices, Ornamentation, and Appendages	
CONCRETE PARAPETS	Concrete parapets with height-to-thickness ratios greater than 2.5 shall have vertical reinforcement. (Tier 2: Sec. 4.8.8.3)	NC

Wall in the penthouse

APPENDAGES	Cornices, parapets, signs, and other appendages that extend above the highest point of anchorage to the structure or cantilever from exterior wall faces and other exterior wall ornamentation shall be reinforced and anchored to the structural system at a spacing equal to or less than 10 feet for Life Safety and 6 feet for Immediate Occupancy. This requirement need not apply to parapets or cornices compliant with Section 4.8.8.1 or 4.8.8.3. (Tier 2: Sec. 4.8.8.4)	C

Appendix B

CONCEPTUAL RETROFIT DESIGN SKETCHES

carollo

Engineers...Working Wonders With Water®

BY YM DATE

CHKD. BY MED DATE

GRANTS PASS

OP BLDG, DIG BLDG, HEADWORKS ELEC

SHEET NO. 1 OF

JOB NO.

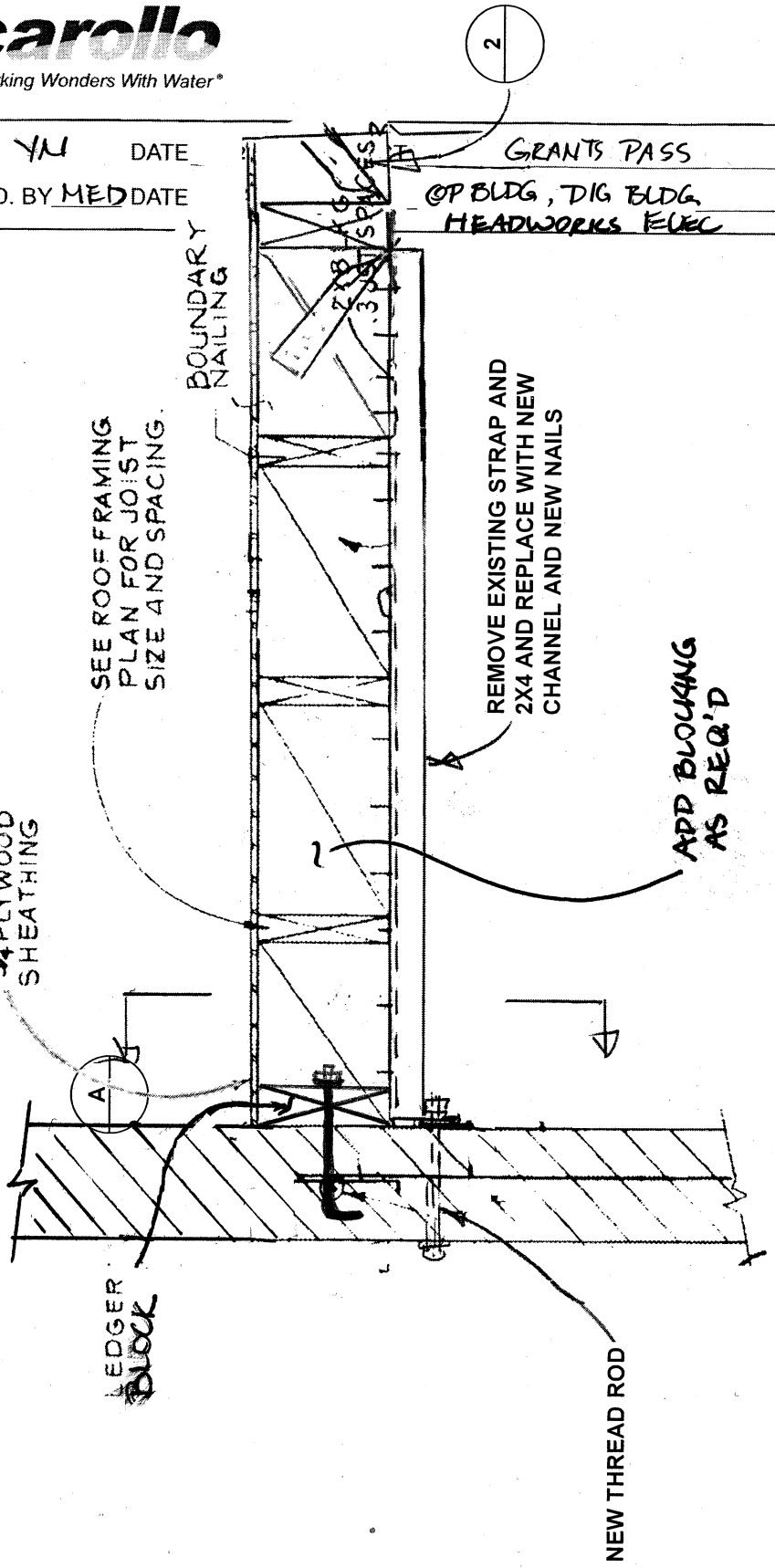

1 DETAIL – OUT OF PLANE WALL ANCHORAGE RETROFIT

Mixed Sources Cert no. SCS-COC-001503 © 1994 FSC

carollo

Engineers...Working Wonders With Water®

BY YN DATE 2/13 SUBJECT GRANTS PASS SHEET NO. 2 OF

CHKD. BY MED DATE JOB NO.

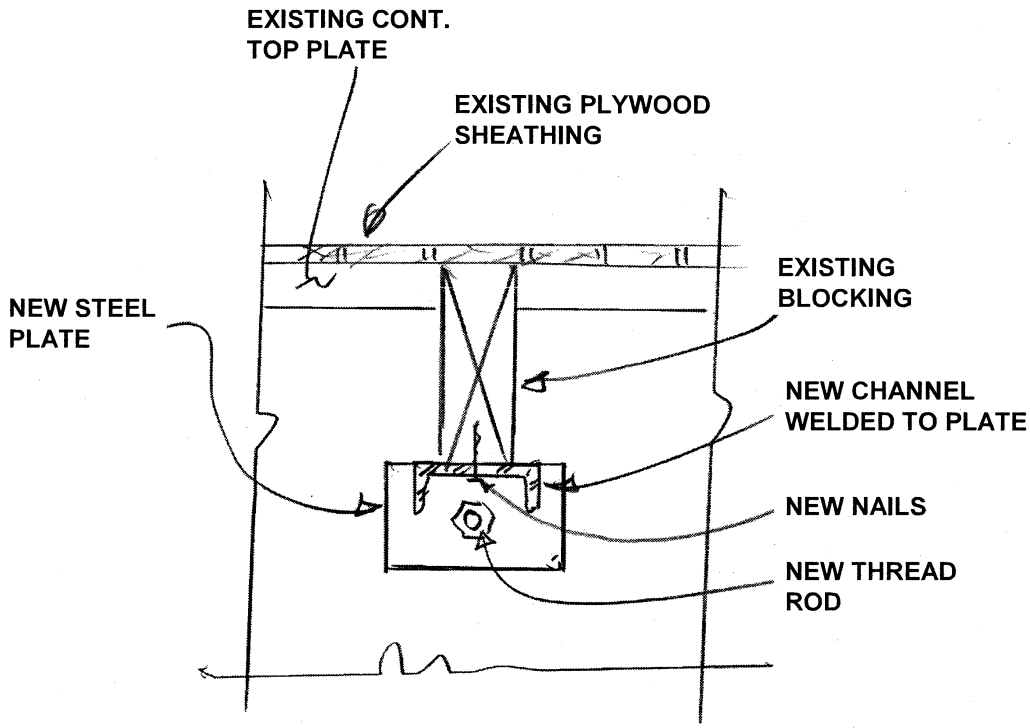

A SECTION

Mixed Sources Cert no. SCS-COC-001503 © 1996 FSC

carollo

Engineers...Working Wonders With Water®

BY YN DATE 2/13 SUBJECT GRANTS PASS SHEET NO. 3 OF

CHKD. BY MED DATE OPERATIONS, DIG CTRL BLDG, HEADWRKS ELEC BLDGS JOB NO.

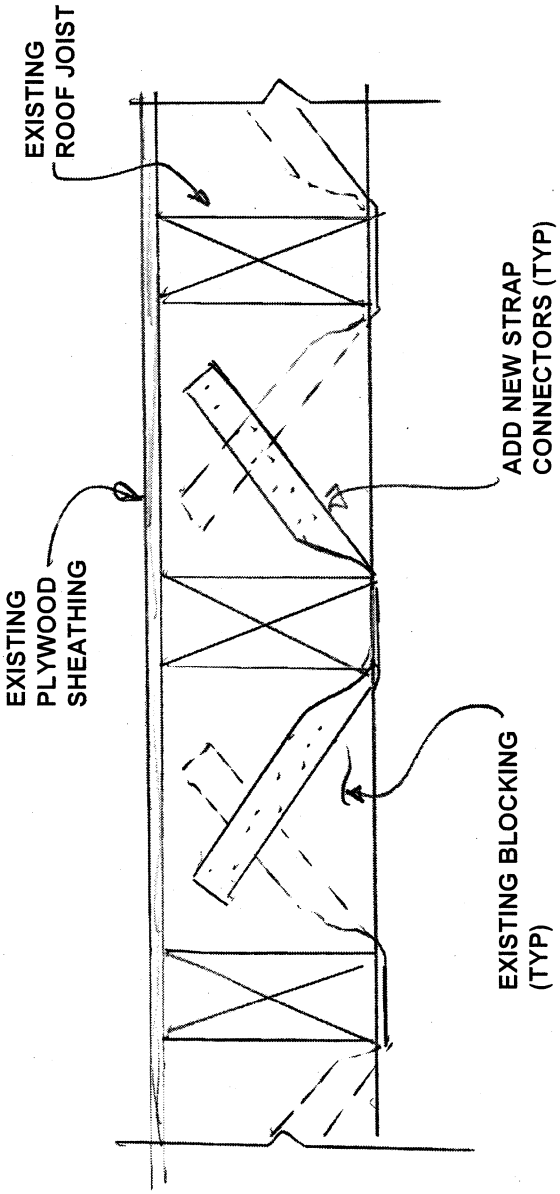

2 DETAIL – CONTINUOUS CHORD CROSS TIE RETROFIT

Mixed Sources Cert no. SCS-COC-001503 © 1996 FSC

carollo

Engineers...Working Wonders With Water®

BY YN	DATE 2/13	SUBJECT GRANTS PASS		SHEET NO. ____	OF ____
CHKD. BY ____	DATE ____	HEADWORKS ELEC BLDG		JOB NO. ____	

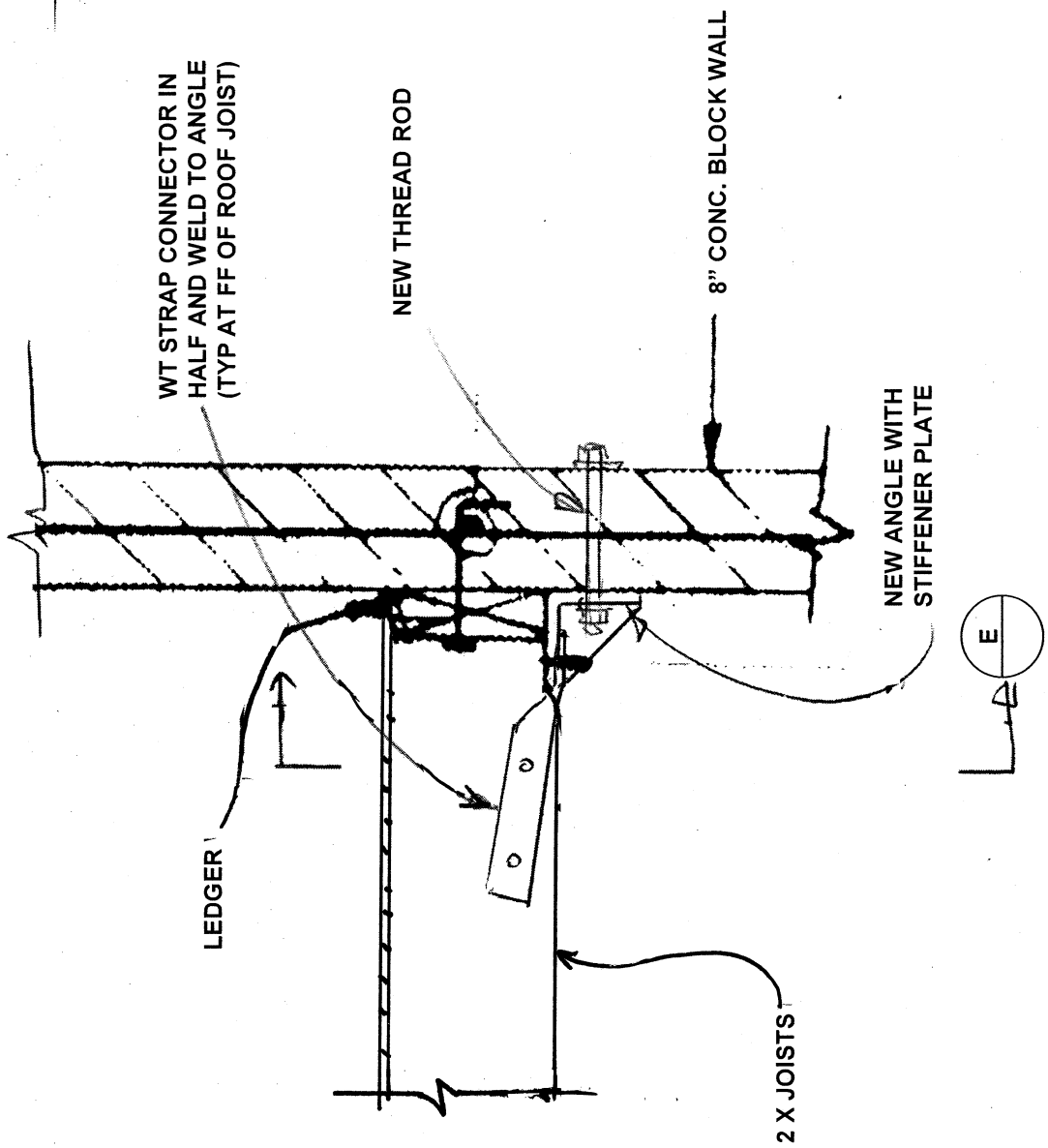

3 DETAIL – OUT OF PLANE WALL ANCHORAGE RETROFIT

carollo

Engineers...Working Wonders With Water®

BY YN DATE 2/13 SUBJECT GRANTS PASS SHEET NO. ____ OF ____

CHKD. BY ____ DATE ____ JOB NO. ____

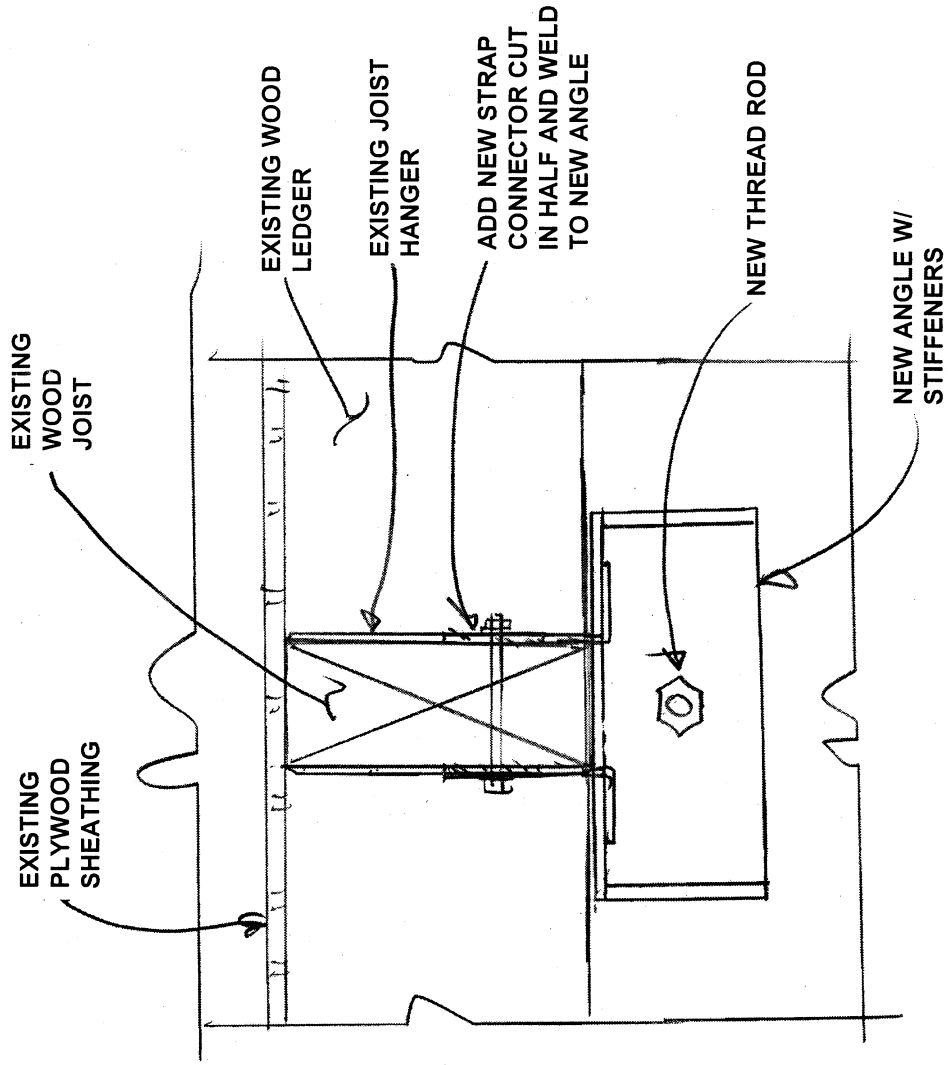

E SECTION

Mixed Sources FSC Cert no. SCS-COC-001503 © 1996 FSC

carollo

Engineers...Working Wonders With Water®

BY YNL DATE 2-13 SUBJECT GRANTS PASS OLD CHLORINE BLDG SHEET NO. ____ OF ____

CHKD. BY ____ DATE ____ JOB NO. ____

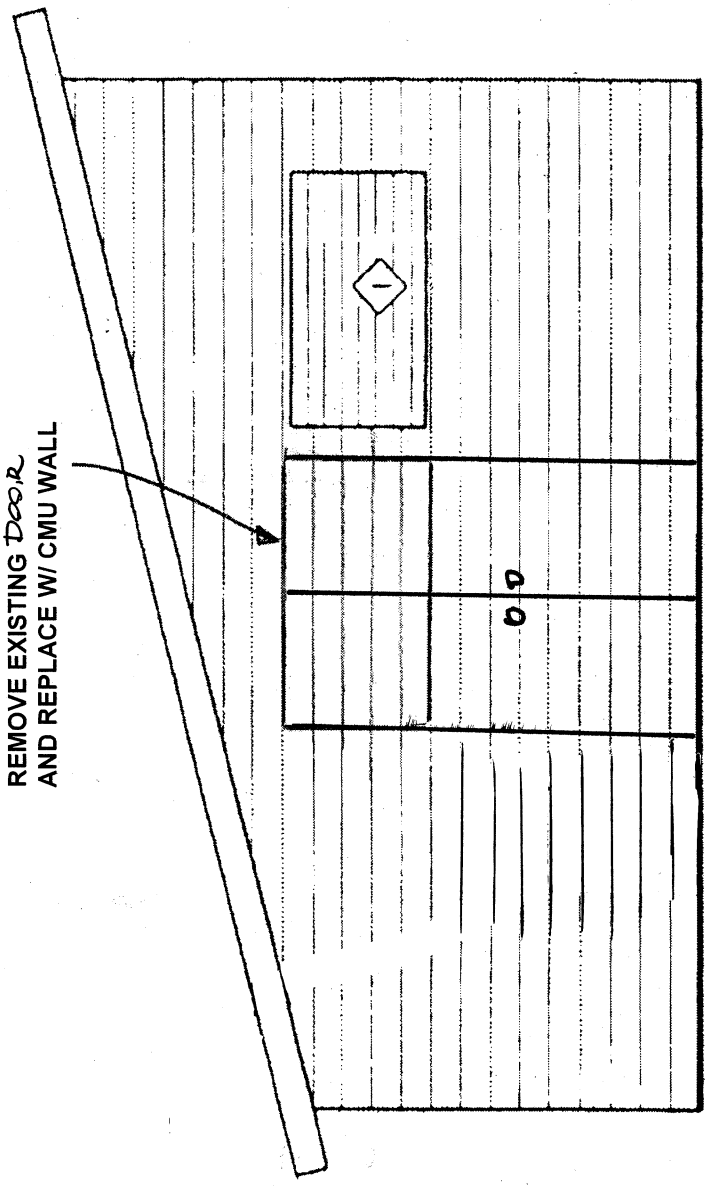

4 DETAIL – SHEAR WALL OUT OF PLANE CAPACITY RETROFIT

Mixed Sources Cert no. SCS-COC-001502 © 1996 FSC

carollo

Engineers...Working Wonders With Water™

BY YN DATE 2/13 SUBJECT GRANTS PASS OP BLDG SHEET NO. ____ OF ____

CHKD. BY ____ DATE ____ JOB NO. ____

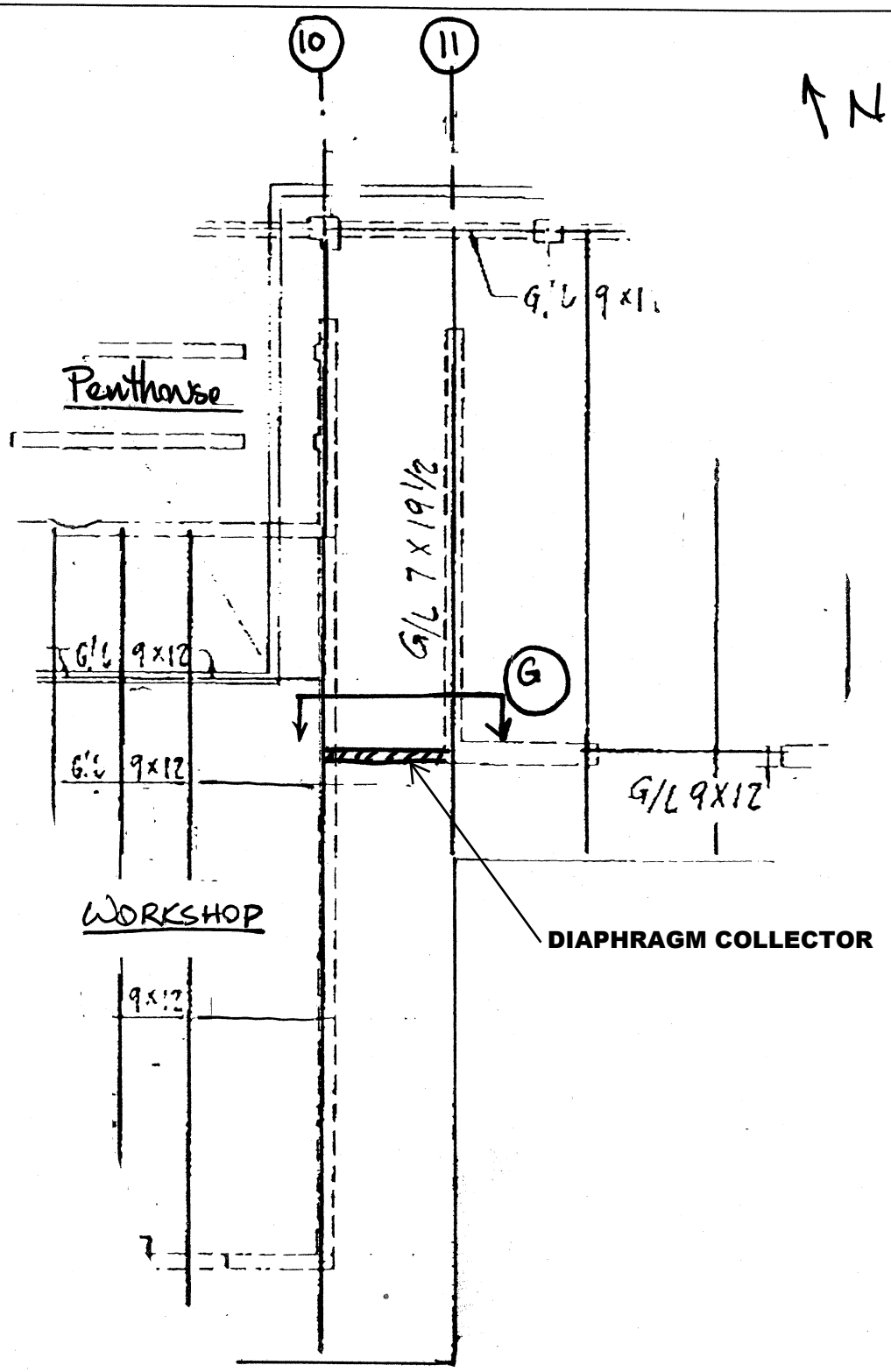

5 Detail – Diaphragm Collector at Reventrant Corner

carollo
Engineers...Working Wonders With Water™

BY YN DATE 2/13 SUBJECT Grants Pass Operations Building SHEET NO. ____ OF ____
CHKD. BY ____ DATE ____ JOB NO. ____

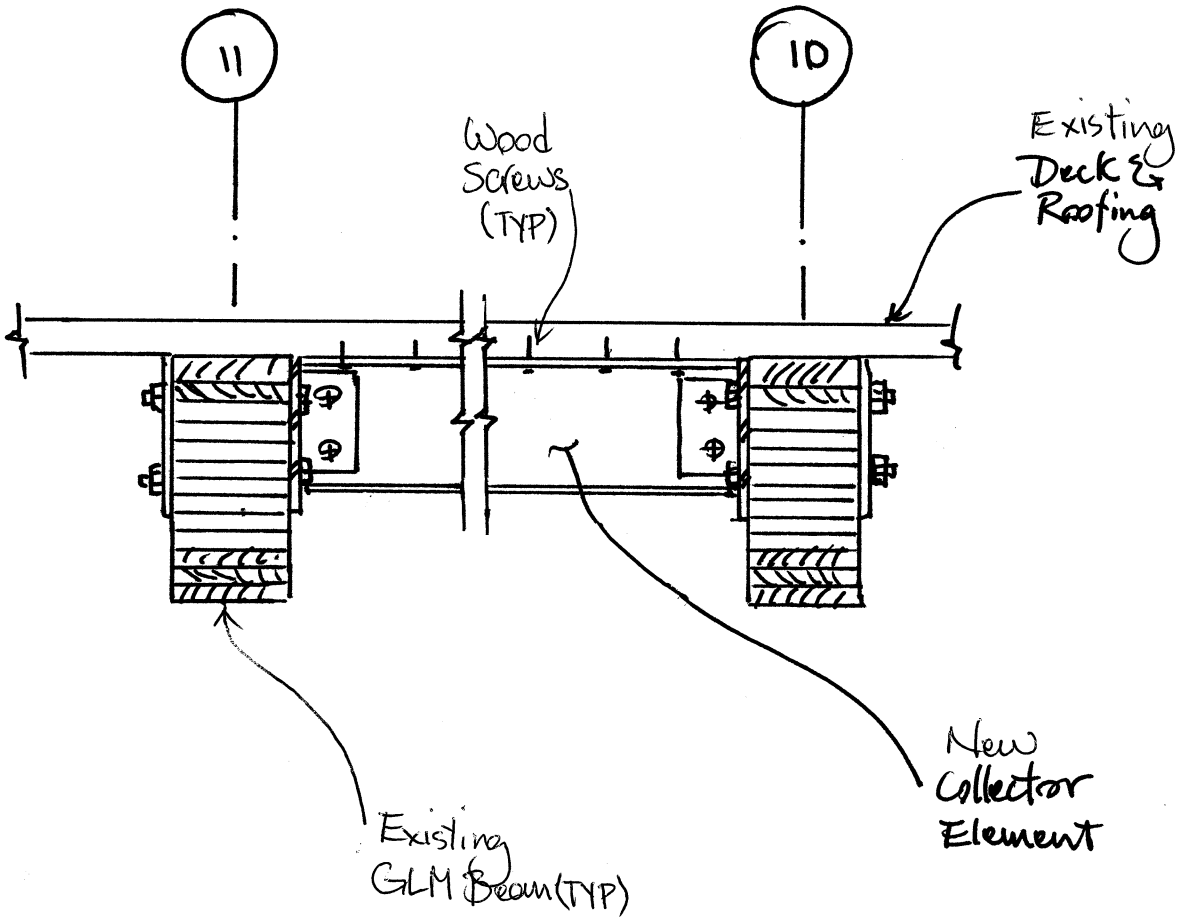

G Section

Appendix C

CONSTRUCTION COST ESTIMATES

DETAILED COST ESTIMATE

Project: WRP Structural Condition Assessment
Client: Grants Pass
Location: Grants Pass, OR
Element: 01 Operations Building

Date : March 15, 2013
By : YN
Reviewed: MED

SPEC. NO.	DESCRIPTION	QUANTITY	UNIT	UNIT COST	SUBTOTAL	TOTAL
	Division 04 - Masonry					
04000	Anchorage of Brick Veneer	1765.5	EA	$29.61	$52,276	
04000	Detail 1 - Out of Plane Wall Anchorage with Blocking	5.00	EA	$250.00	$1,250	
04000	Detail 2 - Continuous Chord Cross Tie	205.00	EA	$25.00	$5,125	
04000	Detail 3 - Out of Plane Wall Anchorage Retrofit	5.00	EA	$150.00	$750	
04000	Detail 5 - Diaphragm Tension at Reentrant Corners	1.00	EA	$4,935.00	$4,935	
	Total					**$112,408**
	Division 05 - Metals					
05000	Anchorage of Mechanical Equipment	8	DAY	$473.76	$3,790	
05000	Anchorage of Electrical Equipment	10	DAY	$473.76	$4,738	
05000	Anchorage of Storage Racks	4	DAY	$473.76	$1,895	
	Total					**$10,423**
	Division 08 - Doors and Windows					
08520	.5" Tempered (Clear) Fixed Glazing	528	SF	$46.39	$24,493	
	Total					**$24,493**
	Division 15 - Mechanical					
15000	Pipe Supports	35	EA	$239.18	$8,371	
15000	Duct Supports	20	EA	$239.18	$4,784	
	Total					**$13,155**
	TOTAL DIRECT COST					**$160,479**
	Contingency	30.0%				$48,144
	Subtotal					**$208,622**
	General Contractor Overhead, Profit & Risk	15.0%				$24,072
	Subtotal					**$232,694**
	Demobilization, Bond, Inusrance &Overhead	10.0%				$16,048
	Subtotal					**$248,742**
	Bid Market Allowance	0.0%				$0
	TOTAL ESTIMATED CONSTRUCTION COST					**$249,000**
	Engineering, Legal & Administration Fees	25.0%				$62,250
	TOTAL ESTIMATED PROJECT COST					**$311,000**

The cost estimate herein is based on our perception of current conditions at the project location. This estimate reflects our professional opinion of accurate costs at this time and is subject to change as the project design matures. Carollo Engineers have no control over variances in the cost of labor, materials, equipment; nor services provided by others, contractor's means and methods of executing the work or of determining prices, competitive bidding or market conditions, practices or bidding strategies. Carollo Engineers cannot and does not warrant or guarantee that proposals, bids or actual construction costs will not vary from the costs presented as shown.

DETAILED COST ESTIMATE

Project: WRP Structural Condition Assessment
Client: Grants Pass
Location: Grants Pass, OR
Element: 02 Digester Control Building

Date : March 15, 2013
By : YN
Reviewed: MED

SPEC. NO.	DESCRIPTION	QUANTITY	UNIT	UNIT COST	SUBTOTAL	TOTAL
	Division 04 - Masonry					
04000	Anchorage of Brick Veneer	136	EA	$29.61	$4,027	
04000	Detail 1 - Out of Plane Wall Anchorage with Blocking	4	EA	$250.00	$1,000	
	Total					**$5,027**
	Division 05 - Metals					
05000	Anchorage of Equipment	4	DAY	$473.76	$1,895	
	Total					**$1,895**
	Division 08 - Doors and Windows					
08520	.5" Tempered (Clear) Fixed Glazing	432	SF	$46.39	$20,040	
	Total					**$20,040**
	Division 15 - Mechanical					
15000	Pipe Supports	3	EA	$239.18	$718	
	Total					**$718**
	TOTAL DIRECT COST					**$27,680**
	Contingency	30.0%				$8,304
	Subtotal					**$35,983**
	General Contractor Overhead, Profit & Risk	15.0%				$4,152
	Subtotal					**$40,135**
	Demobilization, Bond, Inusrance &Overhead	10.0%				$2,768
	Subtotal					**$42,903**
	Bid Market Allowance	0.0%				$0
	TOTAL ESTIMATED CONSTRUCTION COST					**$43,000**
	Engineering, Legal & Administration Fees	25.0%				$10,750
	TOTAL ESTIMATED PROJECT COST					**$54,000**

The cost estimate herein is based on our perception of current conditions at the project location. This estimate reflects our professional opinion of accurate costs at this time and is subject to change as the project design matures. Carollo Engineers have no control over variances in the cost of labor, materials, equipment; nor services provided by others, contractor's means and methods of executing the work or of determining prices, competitive bidding or market conditions, practices or bidding strategies. Carollo Engineers cannot and does not warrant or guarantee that proposals, bids or actual construction costs will not vary from the costs presented as shown.

DETAILED COST ESTIMATE

Project: WRP Structural Condition Assessment
Client: Grants Pass
Location: Grants Pass, OR
Element: 03 Headworks

Date : March 15, 2013
By : YN
Reviewed: MED

SPEC. NO.	DESCRIPTION	QUANTITY	UNIT	UNIT COST	SUBTOTAL	TOTAL
	Division 03 - Concrete					
03000	Type A Concrete Repair	24	LF	$148.05	$3,553	
	Total					**$3,553**
	Division 04 - Masonry					
04000	Detail 1 - Out of Plane Wall Anchorage with Blocking	5.00	EA	$250.00	$1,250	
04000	Detail 2 - Continuous Chord Cross Tie	48.00	EA	$25.00	$1,200	
04000	Detail 3 - Out of Plane Wall Anchorage Retrofit	5.00	EA	$150.00	$750	
	Total					**$3,200**
	Division 05 - Metals					
05000	Anchorage of Equipment	3.00	DAY	$473.76	$1,421	
	Total					**$1,421**
	Division 15 - Mechanical					
15000	Pipe Supports	8.00	EA	$239.18	$1,913	
15000	Duct Supports	3.00	EA	$239.18	$718	
	Total					**$2,631**
	TOTAL DIRECT COST					**$10,805**
	Contingency	30.0%				$3,242
	Subtotal					**$14,047**
	General Contractor Overhead, Profit & Risk	15.0%				$1,621
	Subtotal					**$15,668**
	Demobilization, Bond, Inusrance &Overhead	10.0%				$1,081
	Subtotal					**$16,749**
	Bid Market Allowance	0.0%				$0
	TOTAL ESTIMATED CONSTRUCTION COST					**$17,000**
	Engineering, Legal & Administration Fees	25.0%				$4,250
	TOTAL ESTIMATED PROJECT COST					**$21,000**

The cost estimate herein is based on our perception of current conditions at the project location. This estimate reflects our professional opinion of accurate costs at this time and is subject to change as the project design matures. Carollo Engineers have no control over variances in the cost of labor, materials, equipment; nor services provided by others, contractor's means and methods of executing the work or of determining prices, competitive bidding or market conditions, practices or bidding strategies. Carollo Engineers cannot and does not warrant or guarantee that proposals, bids or actual construction costs will not vary from the costs presented as shown.

DETAILED COST ESTIMATE

Project: WRP Structural Condition Assessment
Client: Grants Pass
Location: Grants Pass, OR
Element: 04 Plant Drain Pump Station

Date : March 15, 2013
By : YN
Reviewed: MED

SPEC. NO.	DESCRIPTION	QUANTITY	UNIT	UNIT COST	SUBTOTAL	TOTAL
	Division 05 - Metals					
05000	Anchorage of Electrical Equipment	4	DAY	$473.76	$1,895	
	Total					**$1,895**
	TOTAL DIRECT COST					**$1,895**
	Contingency	30.0%				$569
	Subtotal					**$2,464**
	General Contractor Overhead, Profit & Risk	15.0%				$284
	Subtotal					**$2,748**
	Demobilization, Bond, Inusrance &Overhead	10.0%				$190
	Subtotal					**$2,937**
	Bid Market Allowance	0.0%				$0
	TOTAL ESTIMATED CONSTRUCTION COST					**$3,000**
	Engineering, Legal & Administration Fees	25.0%				$750
	TOTAL ESTIMATED PROJECT COST					**$4,000**

The cost estimate herein is based on our perception of current conditions at the project location. This estimate reflects our professional opinion of accurate costs at this time and is subject to change as the project design matures. Carollo Engineers have no control over variances in the cost of labor, materials, equipment; nor services provided by others, contractor's means and methods of executing the work or of determining prices, competitive bidding or market conditions, practices or bidding strategies. Carollo Engineers cannot and does not warrant or guarantee that proposals, bids or actual construction costs will not vary from the costs presented as shown.

DETAILED COST ESTIMATE

Project: WRP Structural Condition Assessment
Client: Grants Pass
Location: Grants Pass, OR
Element: 05 Old Chlorine Building

Date : March 15, 2013
By : YN
Reviewed: MED

SPEC. NO.	DESCRIPTION	QUANTITY	UNIT	UNIT COST	SUBTOTAL	TOTAL
	Division 04 - Masonry					
04220	Concrete Block, Split Face, 8"	56	SF	$30.37	$1,700	
04220	Seismic Reinforcement Adder	56	SF	$1.36	$76	
04220	Full Grout (All Cells)	56	SF	$1.24	$70	
	Total					**$1,846**
	Division 05 - Metals					
05000	Anchorage of Equipment	3	DAY	$473.76	$1,421	
	Total					**$1,421**
	TOTAL DIRECT COST					**$3,268**
	Contingency	30.0%				$980
	Subtotal					**$4,248**
	General Contractor Overhead, Profit & Risk	15.0%				$490
	Subtotal					**$4,738**
	Demobilization, Bond, Inusrance &Overhead	10.0%				$327
	Subtotal					**$5,065**
	Bid Market Allowance	0.0%				$0
	TOTAL ESTIMATED CONSTRUCTION COST					**$6,000**
	Engineering, Legal & Administration Fees	25.0%				$1,500
	TOTAL ESTIMATED PROJECT COST					**$8,000**

The cost estimate herein is based on our perception of current conditions at the project location. This estimate reflects our professional opinion of accurate costs at this time and is subject to change as the project design matures. Carollo Engineers have no control over variances in the cost of labor, materials, equipment; nor services provided by others, contractor's means and methods of executing the work or of determining prices, competitive bidding or market conditions, practices or bidding strategies. Carollo Engineers cannot and does not warrant or guarantee that proposals, bids or actual construction costs will not vary from the costs presented as shown.

DETAILED COST ESTIMATE

Project: WRP Structural Condition Assessment
Client: Grants Pass
Location: Grants Pass, OR
Element: 06 Sludge Control Building

Date : March 15, 2013
By : YN
Reviewed: MED

SPEC. NO.	DESCRIPTION	QUANTITY	UNIT	UNIT COST	SUBTOTAL	TOTAL
	Division 05 - Metals					
05000	Anchorage of Wood Sills	3.00	DAY	$473.76	$1,421	
05000	Completing the nailing on shear walls	1.00	DAY	$473.76	$474	
	Total					**$1,895**
	Division 09 - Finishes					
09000	Epoxy Coating	5	DAY	$473.76	$2,369	
	Total					**$2,369**
	TOTAL DIRECT COST					**$4,264**
	Contingency	30.0%				$1,279
	Subtotal					**$5,543**
	General Contractor Overhead, Profit & Risk	15.0%				$640
	Subtotal					**$6,183**
	Demobilization, Bond, Inusrance &Overhead	10.0%				$426
	Subtotal					**$6,609**
	Bid Market Allowance	0.0%				$0
	TOTAL ESTIMATED CONSTRUCTION COST					**$7,000**
	Engineering, Legal & Administration Fees	25.0%				$1,750
	TOTAL ESTIMATED PROJECT COST					**$9,000**

The cost estimate herein is based on our perception of current conditions at the project location. This estimate reflects our professional opinion of accurate costs at this time and is subject to change as the project design matures. Carollo Engineers have no control over variances in the cost of labor, materials, equipment; nor services provided by others, contractor's means and methods of executing the work or of determining prices, competitive bidding or market conditions, practices or bidding strategies. Carollo Engineers cannot and does not warrant or guarantee that proposals, bids or actual construction costs will not vary from the costs presented as shown.

DETAILED COST ESTIMATE

Project: WRP Structural Condition Assessment
Client: Grants Pass
Location: Grants Pass, OR
Element: 07 UV Disinfection Building

Date : March 15, 2013
By : YN
Reviewed: MED

SPEC. NO.	DESCRIPTION	QUANTITY	UNIT	UNIT COST	SUBTOTAL	TOTAL
	Division 05 - Metals					
05000	Tool shed - Anchorage of Wood Sills and Racks	2.00	DAY	$473.76	$948	
05000	Completig nailing of the Shear Walls	1.00	DAY	$473.76	$474	
	Total					**$1,421**
	Division 06 - Wood and Plastics					
06000	UV Building - Light Wood Frame Building	1400	SF	$30.00	$42,000	
	Total					**$42,000**
	TOTAL DIRECT COST					**$43,421**
	Contingency	30.0%				$13,026
	Subtotal					**$56,448**
	General Contractor Overhead, Profit & Risk	15.0%				$6,513
	Subtotal					**$62,961**
	Demobilization, Bond, Inusrance &Overhead	10.0%				$4,342
	Subtotal					**$67,303**
	Bid Market Allowance	0.0%				$0
	TOTAL ESTIMATED CONSTRUCTION COST					**$68,000**
	Engineering, Legal & Administration Fees	25.0%				$17,000
	TOTAL ESTIMATED PROJECT COST					**$85,000**

The cost estimate herein is based on our perception of current conditions at the project location. This estimate reflects our professional opinion of accurate costs at this time and is subject to change as the project design matures. Carollo Engineers have no control over variances in the cost of labor, materials, equipment; nor services provided by others, contractor's means and methods of executing the work or of determining prices, competitive bidding or market conditions, practices or bidding strategies. Carollo Engineers cannot and does not warrant or guarantee that proposals, bids or actual construction costs will not vary from the costs presented as shown.

DETAILED COST ESTIMATE

Project: WRP Structural Condition Assessment
Client: Grants Pass
Location: Grants Pass, OR
Element: 08 Circular Primary Clarifier

Date : March 15, 2013
By : YN
Reviewed: MED

SPEC. NO.	DESCRIPTION	QUANTITY	UNIT	UNIT COST	SUBTOTAL	TOTAL
	Division 02 - Site Construction					
02220	Cut Concrete Slab On Grade	226.19	INFT	$.83	$188	
02220	Demo and Remove Concrete Foundation	384.00	CF	$24.67	$9,475	
02300	Tractor/Backhoe, 30" Bucket Class B (Medium Digging), 0-5' D	279.25	CY	$9.90	$2,765	
02300	Native Trench Backfill/Unconfined Struct. Bf, Class B Material	279.25	CY	$14.63	$4,085	
	Total					**$16,513**
	Division 03 - Concrete					
03000	Concrete Foundation	32.00	CY	$1,974.00	$63,168	
	Total					**$63,168**
	Division 09 - Finishes					
09000	Coat Clarifier Mechanism Center Column	1.00	LS	$14,000.00	$14,000	
	Total					**$14,000**
	Division 11 - Equipment					
11000	Clarifier Center Column Modifications	1.00	LS	$78,960.00	$78,960	
	Total					**$78,960**
	TOTAL DIRECT COST					**$172,641**
	Contingency	30.0%				$51,792
	Subtotal					**$224,433**
	General Contractor Overhead, Profit & Risk	15.0%				$25,896
	Subtotal					**$250,329**
	Demobilization, Bond, Inusrance &Overhead	10.0%				$17,264
	Subtotal					**$267,593**
	Bid Market Allowance	0.0%				$0
	TOTAL ESTIMATED CONSTRUCTION COST					**$268,000**
	Engineering, Legal & Administration Fees	25.0%				$67,000
	TOTAL ESTIMATED PROJECT COST					**$335,000**

The cost estimate herein is based on our perception of current conditions at the project location. This estimate reflects our professional opinion of accurate costs at this time and is subject to change as the project design matures. Carollo Engineers have no control over variances in the cost of labor, materials, equipment; nor services provided by others, contractor's means and methods of executing the work or of determining prices, competitive bidding or market conditions, practices or bidding strategies. Carollo Engineers cannot and does not warrant or guarantee that proposals, bids or actual construction costs will not vary from the costs presented as shown.

DETAILED COST ESTIMATE

Project: WRP Structural Condition Assessment
Client: Grants Pass
Location: Grants Pass, OR
Element: 09 Aeration Basins

Date : March 15, 2013
By : YN
Reviewed: MED

SPEC. NO.	DESCRIPTION	QUANTITY	UNIT	UNIT COST	SUBTOTAL	TOTAL
	Division 02 - Site Construction					
02220	Cut Concrete Walls	2592	INFT	$1.93	$5,014	
02220	Asphalt Pavement Cutting	456	INFT	$.74	$338	
02220	Demo and Remove Knockout Wall	324	CF	$24.67	$7,995	
02300	Native Trench Backfill/Unconfined Struct. Bf, Class B Material	1400	CY	$14.63	$20,481	
02300	Cat 235 Trackhoe 1.50Cy Bucket, Class B (Medium Digging), 0-20' D	1733.33	CY	$3.10	$5,381	
02742	4" Ac Paving On 12" Abc	2600	INFT	$4.22	$10,978	
	Total					**$50,186**
	Division 03 - Concrete					
03000	Replacement of Knockout Walls	12	CY	$1,974.00	$23,688	
	Total					**$23,688**
	Division 05 - Metals					
05120	Custom Baffle Wall Framing	18000	LB	$2.20	$39,632	
	Total					**$39,632**
	Division 15 - Mechanical					
15000	Stainless Steel Pipe Supports	16	EA	$1,954.26	$31,268	
	Total					**$31,268**
	TOTAL DIRECT COST					**$144,775**
	Contingency	30.0%				$43,432
	Subtotal					**$188,207**
	General Contractor Overhead, Profit & Risk	15.0%				$21,716
	Subtotal					**$209,923**
	Demobilization, Bond, Inusrance &Overhead	10.0%				$14,477
	Subtotal					**$224,401**
	Bid Market Allowance	0.0%				$0
	TOTAL ESTIMATED CONSTRUCTION COST					**$225,000**
	Engineering, Legal & Administration Fees	25.0%				$56,250
	TOTAL ESTIMATED PROJECT COST					**$281,000**

The cost estimate herein is based on our perception of current conditions at the project location. This estimate reflects our professional opinion of accurate costs at this time and is subject to change as the project design matures. Carollo Engineers have no control over variances in the cost of labor, materials, equipment; nor services provided by others, contractor's means and methods of executing the work or of determining prices, competitive bidding or market conditions, practices or bidding strategies. Carollo Engineers cannot and does not warrant or guarantee that proposals, bids or actual construction costs will not vary from the costs presented as shown.

DETAILED COST ESTIMATE

Project: WRP Structural Condition Assessment
Client: Grants Pass
Location: Grants Pass, OR
Element: 10 Secondary Clarifiers

Date : March 15, 2013
By : YN
Reviewed: MED

SPEC. NO.	DESCRIPTION	QUANTITY	UNIT	UNIT COST	SUBTOTAL	TOTAL
09000						
05000	**Division 02 - Site Construction**					
02220	Demo and Remove Concrete Foundation	1,200.00	CF	$24.67	$29,610	
02300	Tractor/Backhoe, 30" Bucket Class B (Medium Digging), 0-5' D	1,413.72	CY	$9.90	$13,996	
02300	Native Trench Backfill/Unconfined Struct. Bf, Class B Material	1,413.72	CY	$14.63	$20,682	
02742	4" Ac Paving On 12" Abc	3,180.87	SF	$4.22	$13,430	
	Shotcrete	3,015.93	SF	$10.00	$30,159	
	Total					**$107,878**
	Division 03 - Concrete					
03000	Concrete Foundation	64.00	CY	$1,974.00	$126,336	
	Post Tensioning Circular Tank Walls	2.00	LS	$45,000.00	$90,000	
	Total					**$216,336**
	Division 09 - Finishes					
09000	Coating Clarifier Mechanism Center Column	2.00	LS	$14,000.00	$28,000	
	Total					**$28,000**
	Division 11 - Equipment					
11000	Clarifier Center Column Modifications	2.00	LS	$78,960.00	$157,920	
	Total					**$157,920**
	TOTAL DIRECT COST					**$510,134**
	Contingency	30.0%				$153,040
	Subtotal					**$663,174**
	General Contractor Overhead, Profit & Risk	15.0%				$76,520
	Subtotal					**$739,694**
	Demobilization, Bond, Inusrance &Overhead	10.0%				$51,013
	Subtotal					**$790,707**
	Bid Market Allowance	0.0%				$0
	TOTAL ESTIMATED CONSTRUCTION COST					**$791,000**
	Engineering, Legal & Administration Fees	25.0%				$197,750
	TOTAL ESTIMATED PROJECT COST					**$989,000**

The cost estimate herein is based on our perception of current conditions at the project location. This estimate reflects our professional opinion of accurate costs at this time and is subject to change as the project design matures. Carollo Engineers have no control over variances in the cost of labor, materials, equipment; nor services provided by others, contractor's means and methods of executing the work or of determining prices, competitive bidding or market conditions, practices or bidding strategies. Carollo Engineers cannot and does not warrant or guarantee that proposals, bids or actual construction costs will not vary from the costs presented as shown.

DETAILED COST ESTIMATE

Project: WRP Structural Condition Assessment
Client: Grants Pass
Location: Grants Pass, OR
Element: 11 Sludge Thickener

Date : March 15, 2013
By : YN
Reviewed: MED

SPEC. NO.	DESCRIPTION	QUANTITY	UNIT	UNIT COST	SUBTOTAL	TOTAL
	Division 02 - Site Construction					
02220	Demo and Remove Concrete Foundation	384.00	CF	$24.67	$9,475	
02300	Native Trench Backfill/Unconfined Struct. Bf, Class B Material	163.63	CY	$14.63	$2,394	
02300	Tractor/Backhoe, 30" Bucket Class B (Medium Digging), 0-5' D	163.63	CY	$9.90	$1,620	
	Total					**$13,489**
	Division 03 - Concrete					
03000	Concrete Foundation	14.22	CY	$1,974.00	$28,070	
03000	Type A Concrete Repair	24.00	LF	$148.05	$3,553	
	Total					**$31,623**
	Division 09 - Finishes					
09000	Coating Clarifier Center Column	1.00	LS	$7,000.00	$7,000	
	Total					**$7,000**
	Division 11 - Equipment					
09000	Clarifier Center Column modifications	1.00	LS	$39,480.00	$39,480	
	Total					**$39,480**
	TOTAL DIRECT COST					**$91,592**
	Contingency	30.0%				$27,478
	Subtotal					**$119,070**
	General Contractor Overhead, Profit & Risk	15.0%				$13,739
	Subtotal					**$132,809**
	Demobilization, Bond, Inusrance &Overhead	10.0%				$9,159
	Subtotal					**$141,968**
	Bid Market Allowance	0.0%				$0
	TOTAL ESTIMATED CONSTRUCTION COST					**$142,000**
	Engineering, Legal & Administration Fees	25.0%				$35,500
	TOTAL ESTIMATED PROJECT COST					**$178,000**

The cost estimate herein is based on our perception of current conditions at the project location. This estimate reflects our professional opinion of accurate costs at this time and is subject to change as the project design matures. Carollo Engineers have no control over variances in the cost of labor, materials, equipment; nor services provided by others, contractor's means and methods of executing the work or of determining prices, competitive bidding or market conditions, practices or bidding strategies. Carollo Engineers cannot and does not warrant or guarantee that proposals, bids or actual construction costs will not vary from the costs presented as shown.

DETAILED COST ESTIMATE

Project: WRP Structural Condition Assessment
Client: Grants Pass
Location: Grants Pass, OR
Element: 12 Chlorine Contact Basin

Date : March 15, 2013
By : YN
Reviewed: MED

SPEC. NO.	DESCRIPTION	QUANTITY	UNIT	UNIT COST	SUBTOTAL	TOTAL
	Division 02 - Site Construction					
02220	Demolish Masonry Walls	2,090.00	SF	$9.06	$18,935	
02220	Demolish Concrete Divider Wall	1,230.00	SF	$25.34	$31,171	
	Total					**$50,106**
	TOTAL DIRECT COST					**$50,106**
	Contingency	30.0%				$15,032
	Subtotal					**$65,138**
	General Contractor Overhead, Profit & Risk	15.0%				$7,516
	Subtotal					**$72,654**
	Demobilization, Bond, Inusrance &Overhead	10.0%				$5,011
	Subtotal					**$77,664**
	Bid Market Allowance	0.0%				$0
	TOTAL ESTIMATED CONSTRUCTION COST					**$78,000**
	Engineering, Legal & Administration Fees	25.0%				$19,500
	TOTAL ESTIMATED PROJECT COST					**$98,000**

The cost estimate herein is based on our perception of current conditions at the project location. This estimate reflects our professional opinion of accurate costs at this time and is subject to change as the project design matures. Carollo Engineers have no control over variances in the cost of labor, materials, equipment; nor services provided by others, contractor's means and methods of executing the work or of determining prices, competitive bidding or market conditions, practices or bidding strategies. Carollo Engineers cannot and does not warrant or guarantee that proposals, bids or actual construction costs will not vary from the costs presented as shown.

Appendix D

SELECTED PHOTOGRAPHS

Operations Building

Figure 1. Ductwork Requires Bracing

Figure 2. Cable Tray Requires Bracing

Figure 3. Cracking was observed occasionally on the concrete staircase, at the guardrail post attachment.

Figure 4. Electrical Cabinets are only anchored on one side.

Figure 5. Several suspended pipes including a Natural Gas Pipe are not braced properly against lateral loads.

Figure 6. Blower unit is not anchored properly

Operations Building

Figure 7 .Storage Rack Requires Bracing

Figure 8 .Heater without side bracing

Figure 9. Storage Rack Requires Bracing

Figure 10.Transformers require to be anchored

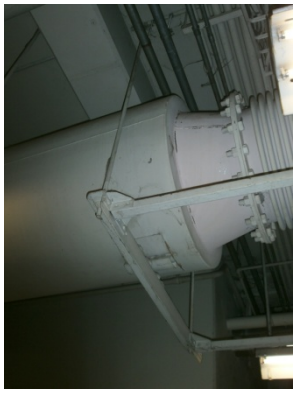

Figure 11 .Silencer without lateral bracing

Figure 12 .Silencer without lateral bracing

Operations Building

Figure 13. Storage Rack Requires Bracing

Figure 14 Hot Water pipes are not braced laterally.

Figure 15. Boiler is not anchored to the floor

Figure 16. Hot Water pipes are not braced laterally.

Figure 17. Deterioration of a pipe support in the boiler room

Figure 18. Old blowers are not anchored

Operations Building

Figure 19. Blower duct is not braced

Figure 20. UPS batteries are not protected against lateral loads

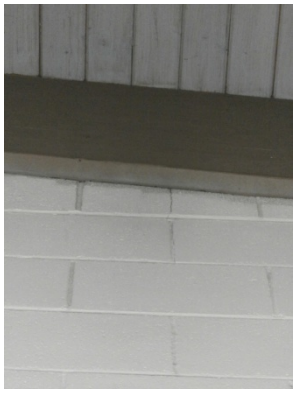

Figure 21. Diagonal Cracking in the East Wall of the Belt Press Hopper Room due to settlement

Figure 22. Diagonal Cracking in the West wall of the workshop due to settlement

Figure 23. Sampling equipment needs to be braced to the concrete pedestal

Figure 24. Duct work requires bracing

Operations Building

Figure 25. Reinforcement of the deck at the diaphragm performed with joist hangers without provisions for lateral loads

Figure 26. Long tall vertical duct work without bracing

Figure 27. Duct work requires bracing

Figure 28. Hot Water piping requires bracing

Figure 29. Crack on the concrete elevated slab, outside of the dewatering room entrance.

Figure 30. Cracks on the short wall, west of the pump room entrance. It shows the extent of settlement damage

Operations Building

Figure 31. Makeshift Storage rack in the penthouse will be unstable during an earthquake

Figure 32. Storage rack in the penthouse is not braced

Figure 33. Joist connections do not have positive capacity for diaphragm shear in the penthouse roof deck.

Figure 34. Penthouse crawlspace: The masonry blocks are not fully grouted

Figure 35. Penthouse crawlspace: The masonry blocks are not fully grouted

Figure 36. Blockings missing between the roof rafters in the Penthouse

Operations Building

Figure 37.Out of plane anchorage is not provided for the penthouse roof deck.

Figure 38.Water heater in the penthouse is not braced properly

Figure 39.Stroage racks are not anchored

Figure 40.Storage racks and electrical cabinets are not anchored properly

Figure 41. Electrical cabinets are not anchored properly

Digester Control Building

Figure 1.The south side of the Digester Control Building is covered by a long glass façade.

Figure 2.Brick veneer on Digester No.1 is installed with dovetail anchors and weep holes are provided

Figure 3.Untempered glass on the south side of the Digester Control Building

Figure 4.Piping in Digester Control Building requires bracing

Figure 5. Piping in Digester Control Building requires bracing

Figure 6.Surge Tank in the Digester Control Building appears to be unanchored

Digester Control Building

Figure 7.Pump Skid outside of the Digester Control Building is not anchored	***Figure 8.Miscellanous piping in the Digester Gas Room next to the Digester Building require bracing***

Headworks Electrical Building

Figure 1.Long run of pipe is not tied to the deck

Figure 2.Cracks in the elevated deck were observed at the openings.

Figure 3.Unbraced piping under the deck. Headworks Structure

Figure 4.Incorrect detailing at the roof to wall connection of the Headworks electrical building will cause cross grain bending in the ledger block

Figure 5.Water damage inside the Headworks Electrical Building

Figure 6 Piping in the basement of the Headworks Electrical Building requires additional bracing.

Headworks Electrical Building

 Figure 7. Duct work in the basement of the Headworks Electrical Building requires additional bracing	

Sludge Thickener

Figure 1. No positive connection between the roof diaphragm and top of shear wall

Figure 2. Center columns supporting the roof beams have little to none lateral support capacity

Figure 3. Failure of coating of the piping

Figure 4. Shrinkage cracks were observed on the tank walls above grade.

Figure 5. Walkway bridge shows signs of corrosion on conduits, guardrail, as well as the bridge structure.

Figure 6. The Thickener mechanism shows signs of wear and corrosion.

Sludge Thickener

 Figure 7. Walkway bridge bearing requires strengthening.	

Plant Drain Pump Station

Figure 1. MCC cabinet is anchored to the wall behind using a small clip angle. Signs of moisture penetration through the building wall, is apparent on the concrete pad.

Figure 2. Electrical cabinets are not anchored to the floor.

Figure 3. UPS batteries are resting on a shelf without any restraint against lateral movements

Figure 4. Light fixtures with pendant supports are recommended to have covers to protect the broken light bulbs from falling.

UV Disinfection Building and Storage Shed

Figure 1. Water damage was observed on the shear walls. The building is not currently anchored down to the slab.

Figure 2. Monorail attached to the roof trusses.

Figure 3. Large opening with a weak collector beam above the opening.

Figure 4. Storage shed has unanchored storage racks and piping

Old Chlorine Building

Figure 1. Unanchored storage rack

Figure 2. Hazardous Material cabinet is not anchored.

Figure 3. Oil barrels do not have a containment area to protect against spilling. The barrels are not anchored to the walls.

Figure 4. Large opening in the south shear wall of the building.

Miscellaneous

Figure 1. Air piping has long unsupported vertical runs in the Aeration Basins

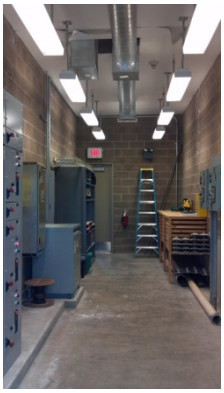

Figure 2. Pendant light fixtures in the RAS/WAS electrical room are not braced

Figure 3. Storage rack in the RAS/WAS electrical room is not anchored

Figure 4. Secondary Clarifier No.3, the bridge walkway bearing requires strengthening.

Figure 5. The walkway bridge bearing on the Clarifier wall requires strengthening.