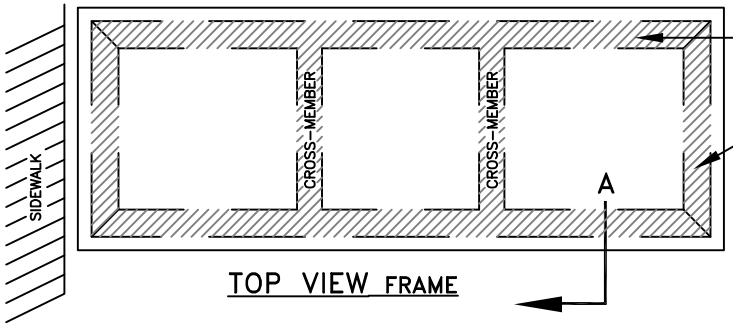

TOP VIEW FRAME

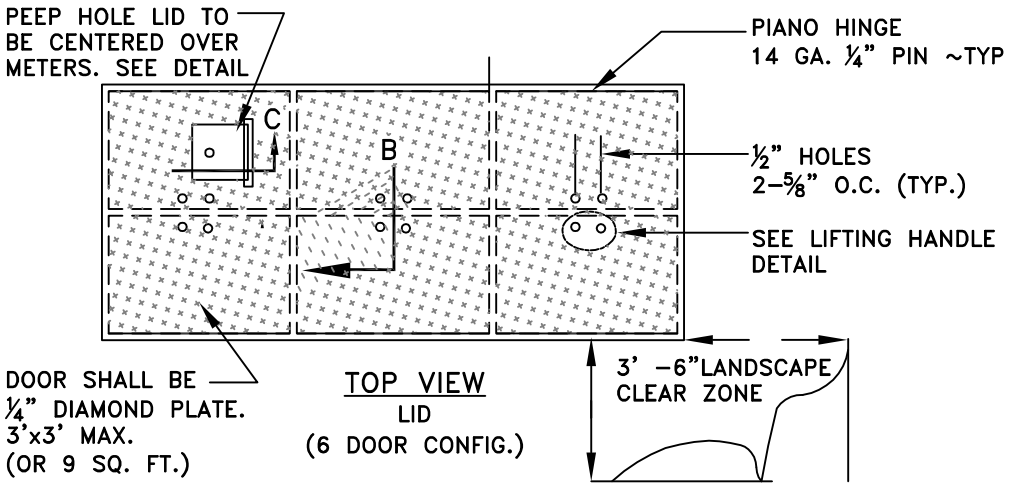

TOP VIEW
LID
(6 DOOR CONFIG.)

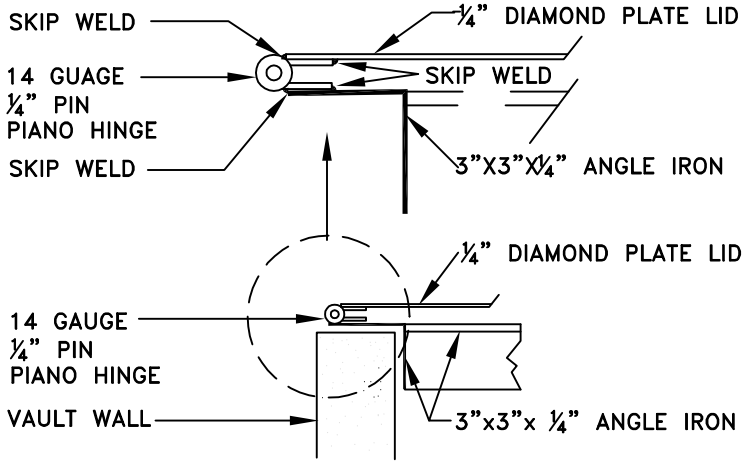

HINGE DETAIL CROSS-SECTION "A"

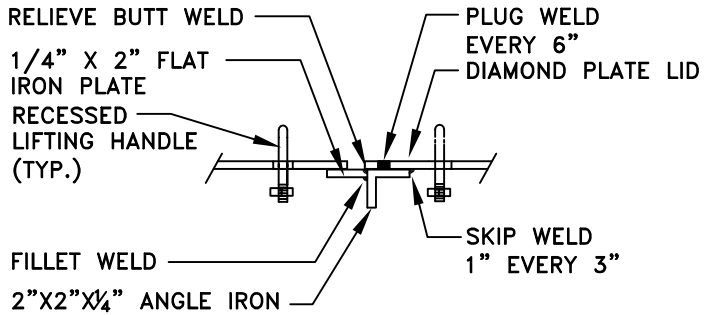

LID SUPPORT DETAIL CROSS-SECTION "B"

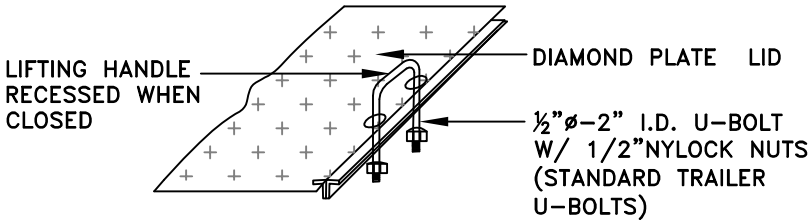

LIFTING HANDLE DETAIL

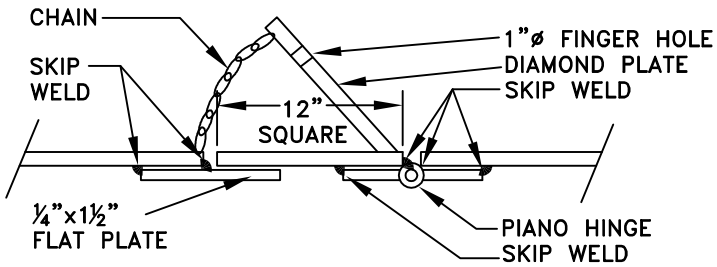

PEEP HOLE DETAIL CROSS-SECTION "C"

NOTES

1. SEE GPSD #214 FOR VAULT SPECIFICATIONS
2. TOP CONFIGURATION SHALL BE BASED ON SIZE OF VAULT. SIZE OF EACH LID NOT TO EXCEED 9 SQ. FT.
3. ALL METAL SURFACES SHALL BE REMOVED OF MILL SCALES AND EGREASED AND PAINTED WITH ONE COAT OF RED PRIMER AND TWO COATS OF DEEP BLUE FINISH. (RUSTOLEUM OR APPROVED EQUAL)
4. EACH INDIVIDUAL DOOR SHALL BE EQUIPPED WITH ONE CHAIN TO HOLD DOR OPEN AT 135° FROM CLOSED POSITION

NO.	DATE	INITIAL	REVISIONS
1	6-01	FMS	CHAINS ON DOORS
2	5/02	FMS	UPDATES
3	2/05	FMS	WATER STD DWG UPDATE
DESIGN: STAFF		DRAWN: FMS	APPROVED: DAP

CITY OF GRANTS PASS
ENGINEERING DIVISION

VAULT TOP ASSEMBLY

SCALE: NONE

DWG. NO. 214-A